Inspiration

Fine furniture and lighting

PAOLO CASTELLI

Listino Prezzi
Pricelist

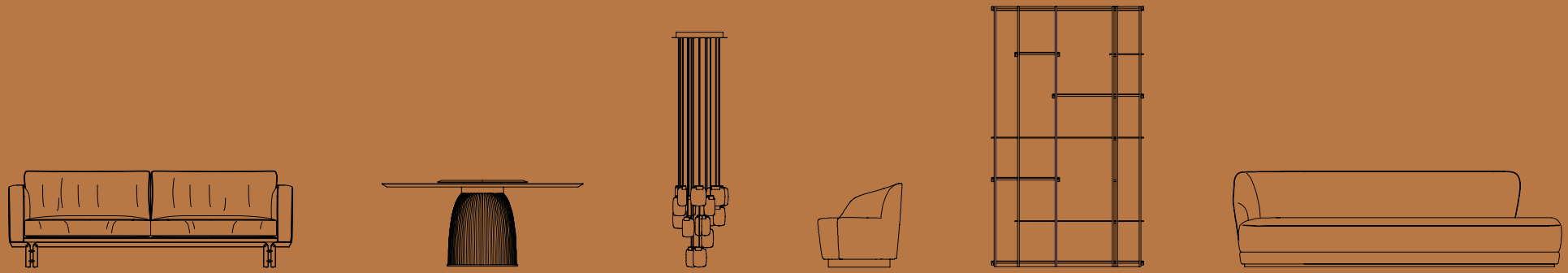

Inspiration

PAOLO CASTELLI

Fine Furniture
& Lighting

TAVOLI | TABLES	p. 7
CONSOLE | CONSOLE TABLES	p. 51
SEDUTE | SEATING	p. 61
DIVANI & POLTRONE | SOFAS & ARMCHAIRS	p. 85
CONTENITORI e LIBRERIE | STORAGE & BOOKCASES	p. 135
LETTI | BED	p. 171
COMPLEMENTI | COMPLEMENTS	p. 183
TAPPETI | CARPETS	p. 206
CUSCINI DECORATIVI | CUSHIONS DECORATIVE	p. 208
LUCI | LIGHTING	p. 211

TAVOLI | TABLES p. 7
Alba p. 8
BDS desk p. 30
Black & Gold table p. 24
Claude p. 42
Dione coffee table p. 38
Dione table p. 14
Elle p. 37
Flora p. 26
For Hall coffee table p. 34
For Hall table p. 20
Imperfect p. 44
Leaf p. 12
Lens p. 40
Mars p. 18
My Beauty p. 29
Nettuno coffee table p. 46
Netuno desk p. 28
Netuno table p. 10
Ribbon p. 48
Soft Ratio coffee table p. 32

CONSOLE | CONSOLE TABLES p. 51
Black & Gold console p. 56
Cultum p. 54
For Hall console p. 52
Reverse p. 55
Sean console p. 58

SEDUTE | SEATING p. 61
Audrey p. 66
Echo p. 70
Empire p. 80
Ginevra p. 82
N°5 Low chair p. 74
N°5 High chair p. 76
Sofia p. 62
Strapuntino p. 72
U chair p. 78
Venice stool p. 83

DIVANI & POLTRONE | SOFAS & ARMCHAIRS p. 85
Dromo angular p. 100
Dromo armchair p. 104
Dromo club p. 96
Dromo sofa p. 102
Elegance armchair p. 112
Elegance bench p. 113
Elegance chaise longue p. 110
Elegance sofa p. 108
Lady Peacock p. 132
Lemma p. 86
Lemma simmetric p. 89
Mambo p. 90
Orus bench p. 117
Orus dormeuse p. 116
Orus sofa p. 114
Parabolica p. 130
Sean sofa p. 106
Soft Ratio sofa p. 92
U lounge p. 128
Venice armchair p. 120
Venice bench & pouf p. 119
Venice bergere p. 122
Venice office p. 126
Venice sofa p. 118
Venice swing p. 124

CONTENITORI e LIBRERIE | STORAGE & BOOKCASES p. 135
BDS bookcase p. 142
Black & Gold cabinets p. 148
Dea p. 168
Dromo cabinet p. 150
Fine Collection 180A p. 162
Fine Collection 180B p. 160
Fine Collection 220 p. 159
Fine Collection bedside table p. 166
Fine Collection chest of drawers p. 164
For Living cocktail p. 156
For Living high cabinet p. 154
For Living low cabinet p. 152
For Living showcase p. 144
For Living tall cabinet p. 158
Saggio p. 138
Socrate p. 140
Soft Ratio cabinet p. 146
Uffizio p. 136

LETTI | BED p. 171
Stripes p. 172
Odissea p. 174
George p. 178
Rgency p. 180

COMPLEMENTI | COMPLEMENTS p. 187
Accra p. 192
Anodine screen p. 186
Best World p. 194
Convivier p. 188
Flare p. 184
Maputo p. 190
Murano vases p. 202

TAPPETI | CARPETS p. 206

CUSCINI DECORATIVI | CUSHIONS DECORATIVE p. 208

LUCI | LIGHTING p. 211
Allure p. 232
Ambra p. 276
Anodine Circle light p. 270
Anodine floor p. 260
Anodine table & mini p. 262
Anodine wall p. 258
Circle lamp p. 268
Colette & Hugo p. 274
Comet p. 264
Fair light p. 245
Galaxy p. 272
Golden Cloud suspension p. 230
Golden Cloud wall p. 243
Golden Disc suspension p. 240
Golden Disc wall p. 249
Joy suspension p. 254
Joy wall p. 256
Kalì suspension p. 226
Kalì wall p. 228
Labilis composition p. 236
Labilis rings p. 237
Labilis wall p. 244
My Lamp ceiling p. 218
My Lamp floor p. 224
My Lamp suspension p. 212
My Lamp table p. 220
My Lamp wall p. 222
Nettuno table lamp p. 278
Roulette p. 252
Soreluna p. 266
Venus p. 248
Wave p. 250

Inspiration

Fine furniture and lighting

PAOLO CASTELLI

Tavoli
Tables

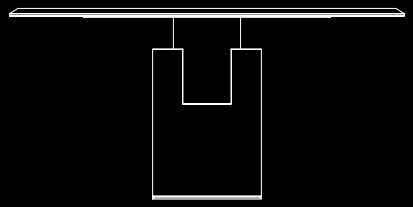
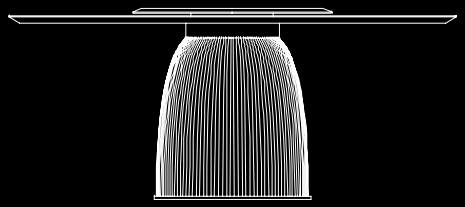
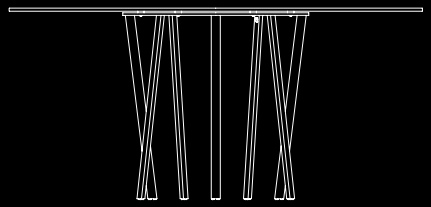
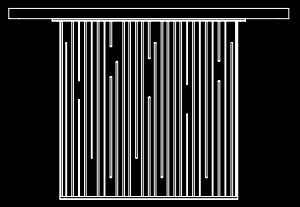

Inspiration
Fine furniture and lighting

Alba
Table

DESIGN | VITTORIO PARADISO

Finishes of the above picture

Metal Finish
Bronze
Shadow Matt

Vicenza Stone
Col. Ivory
Honed

Bovine Leather
Col. 634 Oasi

Una miscela di materiali naturali, la pietra vicentina levigata color avorio, e industriali, il bronzo nella finitura shadow opaco, si fondono in un prodotto unico dalle forme geometriche e razionali. Un cerchio e un cilindro, che accostati fra loro formano un unico elemento di grande personalità e dal forte segno grafico in cui la forza espressiva dei materiali esalta le singole lavorazioni. Estremamente particolare la giunzione tra la base e il top del tavolo che genera un gradevole ed elegante dettaglio tecnico/estetico. Disponibile anche la versione con base in legno rivestita in pelle col. 634 Oasi.
Su richiesta il piano presenta al centro una decorazione circolare a bassorilievo, segno della mano degli artigiani che compongono la bellezza di finiture mai banali.

A combination of natural and industrial materials, Vicenza stone honed col. Ivory and bronze in a matt shadow finish respectively, come together to create a unique product featuring geometrical and rational shapes. A circle and a cylinder, coupled to form a single element characterised by outstanding personality and a strong graphic sign in which the expressive strength of the materials emphasises the individual processes. The joint between the base and the top of the table is extremely remarkable, generating a detail that is elegantly pleasing both technically and aesthetically. Also available model with wooden basement covered in leather, col. 634 Oasi.
On request, the centre of the table features a circular bas-relief decoration, a symbol of the skill of the craftsmen who create the most remarkably beautiful finishes

ROUND
Ø 160
Ø 180

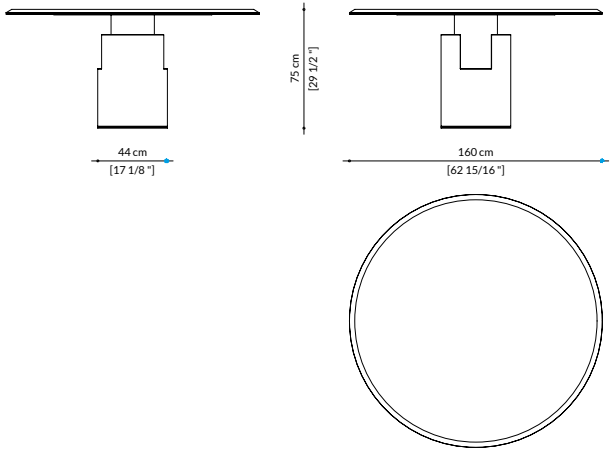

Ø 160 LEATHER | TAV.ALBA.310 — 9.015,00€
Top Vicenza stone col. Ivory honed
Base in metal finish bronze shadow mat, covered with leather col. 634 Oasi

Ø 160 STONE | TAV.ALBA.311 — 9.900,00€
Top Vicenza stone col. Ivory honed
Base in metal finish bronze shadow mat, covered with Vicenza stone col. Ivory honed

Ø 180 LEATHER | TAV.ALBA.320 — 10.300,00€
Top Vicenza stone col. Ivory honed
Base in metal finish bronze shadow mat, covered with leather col. 634 Oasi

Ø 180 STONE | TAV.ALBA.321 — 11.100,00€
Top Vicenza stone col. Ivory honed
Base in metal finish bronze shadow mat, covered with Vicenza stone col. Ivory honed

RECTANGULAR

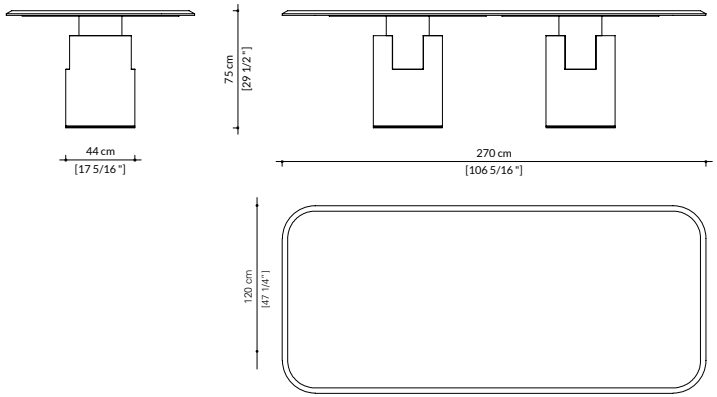

RECTANGULAR LEATHER | TAV.ALBA.330 — 17.900,00€
Top Vicenza stone col. Ivory honed
Base in metal finish bronze shadow mat, covered with leather col. 634 Oasi

RECTANGULAR STONE | TAV.ALBA.331 — 19.900,00€
Top Vicenza stone col. Ivory honed
Base in metal finish bronze shadow mat, covered with Vicenza stone

◄ Pietra Vicentina: pietra antica con macrofossili.

Pietra Vicentina: antique stone with macro-fossil.

Nettuno

Table

DESIGN | VITTORIO PARADISO

Finishes of the above picture

Marble
Noir Saint
Laurent striped

Wood
Eucalyptus

Metal Black
Matt
varnished

Alternative base option

Metal Finish
Black Nichel
Matt striped

Tavolo dalla spiccata personalità con struttura in metallo con finitura oro satinato opaco e rivestimento base in marmo Noir Saint Laurent lucido a coste - fresatura cnc (a controllo numerico), top in legno di eucalipto con bordatura in metallo verniciato nero opaco impreziosito da dettagli in finitura oro satinato opaco. Disponibile anche con base in metallo finitura nichel nero opaco.

A table with a distinct personality featuring a metal structure finished in matt satin gold and a base covered in glossy ribbed cnc (numerically controlled) milled Noir Saint Laurent marble, a top in eucalyptus wood with metal edging with a matt black varnished finish embellished with details in matt satin finish gold.
Also available with black nichel metal base.

ROUND

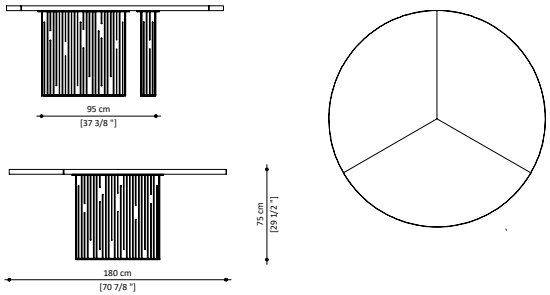

Ø 180 METAL | TAV.NETT.321 13.400,00€
Eucalyptus wood top - Metal structure black nichel matt - Metal cnc base
Top with metal perimeter edge finished matt black varnished with matt satin finish gold details

Ø 180 MARBLE | TAV.NETT.320 19.000,00€
Eucalyptus wood top - Marble Noir Saint Laurent striped
Top with metal perimeter edge finished matt black varnished with matt satin finish gold details

RECTANGULAR

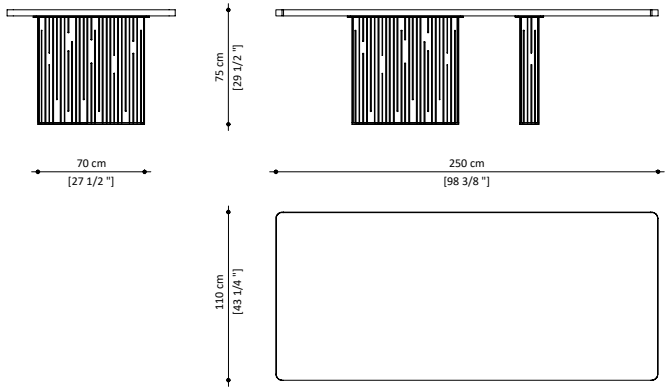

RECTANGULAR METAL | TAV.NETT.301 11.900,00€
Eucalyptus wood top - Metal structure black nichel matt - Metal cnc base
Top with metal perimeter edge finished matt black varnished with matt satin finish gold details

RECTANGULAR MARBLE | TAV.NETT.300 18.000,00€
Eucalyptus wood top - Marble Noir Saint Laurent striped
Top with metal perimeter edge finished matt black varnished with matt satin finish gold details

Leaf
Table

DESIGN | PAOLO CASTELLI

Finishes of the above picture

Metal Finish
Matt Gold

Glass
Grey
Brown

Resin Concrete
Handcrafted

Un tavolo rotondo dalle dimensioni generose, caratterizzato da una base circolare in metallo, finitura oro satinato opaco, piedistallo decorativo in resina-cemento decorata a mano - finitura brunita, con dettagli in finitura oro opaco, top lucido in vetro retrolaccato RAL 8019 marrone grigiastro, con bordatura metallica finitura oro opaco.

A round table of generous proportions, featuring a circular metal base with a matt satin gold finish, a decorative concrete resin pedestal with a hand-painted surface - a burnished finish, with matt gold details, a glossy top of RAL 8019 grey brown back-lacquered glass, with matt gold finish metal edging.

Ø 160
Ø 180

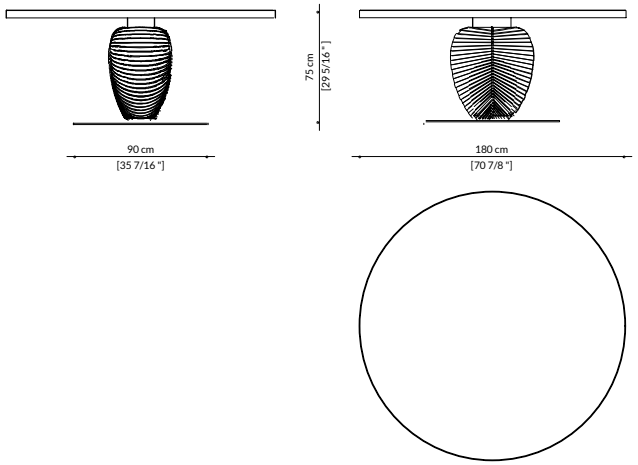

Ø160 | TAV.LEAF.310 — 11.880,00€
Circular metal base, matt satin gold finished - decorative resin concrete pedestal
Glossy back-lacquered RAL 8019 grey brown glass top

Ø180 | TAV.LEAF.300 — 12.750,00€
Circular metal base, matt satin gold finished - decorative concrete pedestal
Glossy back-lacquered RAL 8019 grey brown glass top

Dione
Table

DESIGN | PAOLO CASTELLI

Finishes of the above picture

3D Striped Ceramic from Vietri

Marble Calacatta

Metal Finish Matt Gold

Matt Brass

Marble White Silk (top alternative)

Tavolo monolite che esalta nella purezza statuaria del marmo e della ceramica finemente lavorata, la sua immagine scenica. Realizzato a Vietri - una delle culle storiche della lavorazione della Ceramica Italiana - Dione Table ha forma rotonda e dimensioni scultoree. Base a forma di campana realizzata in ceramica artigianale di Vietri a coste, finitura smaltata bianca, che poggia su una piastra circolare in metallo con finitura oro opaco. Piano in prezioso marmo Calacatta o White Silk opaco con bordi a spizza, disco centrale e dettagli realizzati in ottone satinato opaco.

Monolith table that enhances the statuary purity of finely worked marble and ceramics, its scenic image. Made in Vietri – one of the historic cradles of Italian ceramic manufacturing – Dione Table has a round shape and sculptural dimensions.
Bell-shaped base made of Vietri artisan ribbed ceramics, white enamel finish, resting on a circular metal plate with matt gold finish. Top in precious Calacatta marble or White silk matt with raised edges, central disc and details in brass satin matt.

Ø160
Ø180

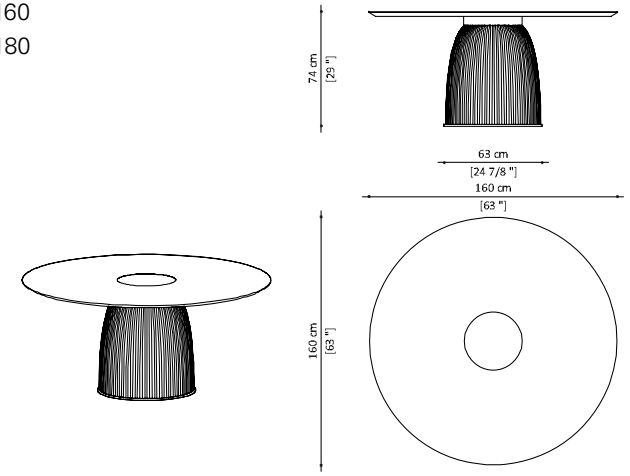

Ø160 WHITE SILK | TAV.DION.322 — 17.000,00€
Top in White Silk marble matt - Mat brass details
3D Ceramic base - Mat gold details

Ø160 CALACATTA | TAV.DION.320 — 20.400,00€
Top in Calacatta marble - Mat brass details
3D Ceramic base - Mat gold details

Ø180 WHITE SILK | TAV.DION.312 — 19.900,00€
Top in White Silk marble matt - Mat brass details
3D Ceramic base - Mat gold details

Ø180 CALACATTA | TAV.DION.310 — 24.400,00€
Top in Calacatta marble - Mat brass details
3D Ceramic base - Mat gold details

◄ Ceramica artigianale realizzata e modellata a mano presso antichi laboratori a Vietri.

Handmade artisan ceramic manually operated in antique Vietri laboratories.

Dione Lazy Susan

Table

DESIGN | PAOLO CASTELLI

Finishes of the above picture

3D Striped Ceramic from Vietri

Marble Calacatta

Metal Finish Matt Gold

Matt Brass

Marble White Silk (top alternative)

Tavolo monolite che esalta nella purezza statuaria del marmo e della ceramica finemente lavorata, la sua immagine scenica. Realizzato a Vietri - una delle culle storiche della lavorazione della Ceramica Italiana - Dione Table ha forma rotonda e dimensioni scultoree.
Base a forma di campana realizzata in ceramica artigianale di Vietri a coste, finitura smaltata bianca, che poggia su una piastra circolare in metallo con finitura oro opaco. Piano in prezioso marmo Calacatta o White Silk opaco con bordi a spizza, disco centrale e dettagli realizzati in ottone satinato opaco.

Monolith table that enhances the statuary purity of finely worked marble and ceramics, its scenic image. Made in Vietri - one of the historic cradles of Italian ceramic manufacturing - Dione Table has a round shape and sculptural dimensions.
Bell-shaped base made of Vietri artisan ribbed ceramics, white enamel finish, resting on a circular metal plate with matt gold finish. Top in precious Calacatta marble or White silk matt with raised edges, central disc and details in brass satin matt.

Ø 160 - lazy susan Ø 80 cm

Ø 180 - lazy susan Ø 80 cm

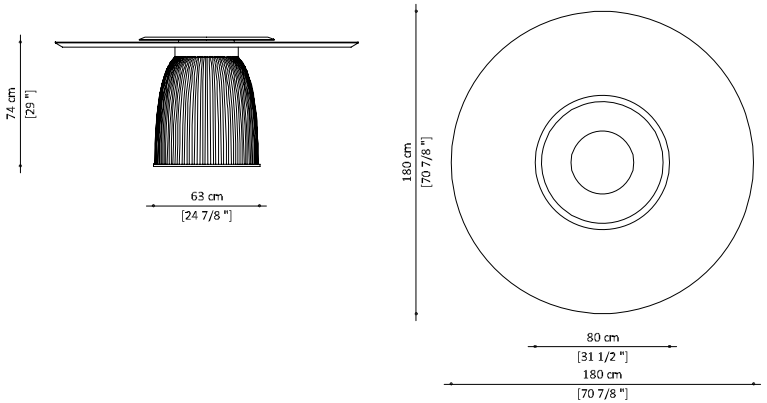

Ø 160 WHITE SILK | TAV.DION.323 Top in White Silk marble matt - Mat brass details 3D Ceramic base - Mat gold details	19.300,00€
Ø 160 CALACATTA | TAV.DION.321 Top in Calacatta marble - Mat brass details 3D Ceramic base - Mat gold details	23.300,00€
Ø 180 WHITE SILK | TAV.DION.313 Top in White Silk marble matt - Mat brass details 3D Ceramic base - Mat gold details	22.200,00€
Ø 180 CALACATTA | TAV.DION.311 Top in Calacatta marble - Mat brass details 3D Ceramic base - Mat gold details	28.400,00€

Dione Lazy Susan

220

DESIGN | PAOLO CASTELLI

3D Striped Ceramic from Vietri

Marble Calacatta

Metal Finish Matt Gold

Marble White Silk (top alternative)

Tavolo monolite che esalta nella purezza statuaria del marmo e della ceramica finemente lavorata, la sua immagine scenica. Realizzato a Vietri - una delle culle storiche della lavorazione della Ceramica Italiana - Dione Table ha forma rotonda e dimensioni scultoree.
Base a forma di campana realizzata in ceramica artigianale di Vietri a coste, finitura smaltata bianca, che poggia su una piastra circolare in metallo con finitura oro opaco. Piano in prezioso marmo Calacatta o White Silk opaco con bordi a spizza, disco centrale e dettagli realizzati in metallo finitura oro satinato opaco.

Monolith table that enhances the statuary purity of finely worked marble and ceramics, its scenic image. Made in Vietri - one of the historic cradles of Italian ceramic manufacturing - Dione Table has a round shape and sculptural dimensions.
Bell-shaped base made of Vietri artisan ribbed ceramics, white enamel finish, resting on a circular metal plate with matt gold finish. Top in precious Calacatta marble or White silk matt with raised edges, central disc and details in metal matt gold finish.

Ø 220- lazy susan Ø 120 cm

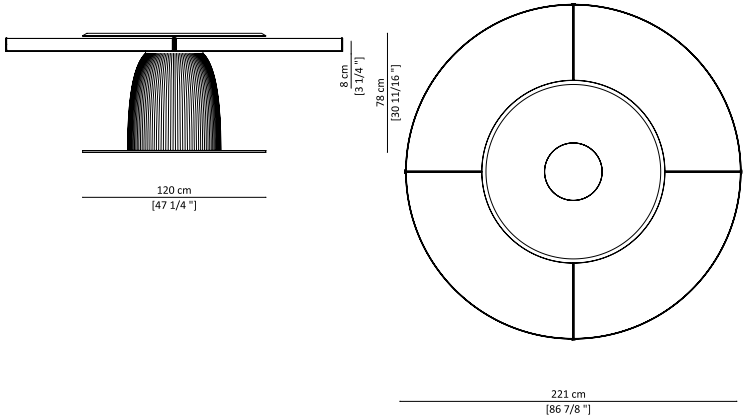

Ø 220 WHITE SILK | TAV.DION.332 — 30.700,00€
Top in White Silk marble matt - Mat gold details
3D Ceramic base - Mat gold details

Ø 220 CALACATTA | TAV.DION.331 — 37.500,00€
Top in Calacatta marble - Mat gold details
3D Ceramic base - Mat gold details

Mars
Table

DESIGN | PAOLO CASTELLI

Finishes of the above picture

Lacquering Black with Golden Dust 100 Gloss

Metal Finish Matt Gold

Lacquering Black 100 gloss RAL9005

Mars Table è un affascinante tavolo, decorato da una cascata di polvere d'oro che rende unici importanti ingressi e sofisticate sale da pranzo, caratterizzato anche da una base sferica dai rimandi galattici.
Il tavolo ha un piano circolare in MDF di spessore 4 cm, con una preziosa laccatura lucida nera 100 gloss che incorpora polvere d'oro gettata a mano a più strati, creando un effetto tridimensionale che ne esalta la bellezza. La base è formata da una elegante campana in alluminio tornito in lastra con motivo rigato tridimensionale, finitura color oro opaco e che poggia su una base tonda sempre in mdf laccata nero lucido 100 gloss.

Mars Table is a fascinating table defined by its gold dust decorated top and elegant spherical base with a three-dimensionally striped pattern that bring a unique style to important entrances and sophisticated dining rooms. The round, the 4 cm thicked top is made from MDF with a precious 100 gloss lacquered finish that includes gold dust sprinkled by hand over multiple layers, creating a three-dimensional effect that enhances its beauty. The base is made of a turned aluminium bell with a three-dimensionally striped pattern matt gold finish and placed on a round mdf pedestal with a black 100 gloss lacquered finish.

Ø 160
Ø 180
Ø 200

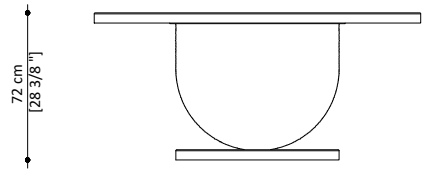

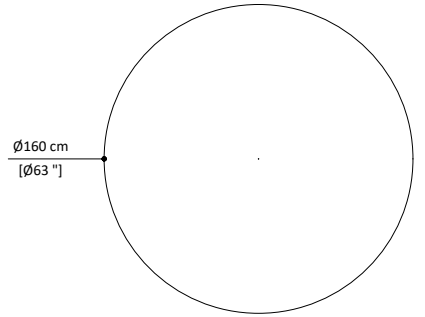

Ø 160 | TAV.MARS.330 — 9.700,00 €
Top laquered 100 gloss black with golden dust metal
Support in metal striped col. matt gold - Round base laquered 100 gloss black

Ø 180 | TAV.MARS.310 — 10.800,00 €
Top laquered 100 gloss black with golden dust metal
Support in metal striped col. matt gold - Round base laquered 100 gloss black

Ø 200 | TAV.MARS.320 — 11.900,00 €
Top laquered 100 gloss black with golden dust metal
Support in metal striped col. matt gold - Round base laquered 100 gloss black

◄ Laccatura 100 gloss impreziosita da polvere d’oro gettata a mano a più strati.

100 gloss lacquering enhanced by golden powder spread by hand.

For Hall
Table Oval

DESIGN | PAOLO CASTELLI

Finishes of the above picture

Metal Finish Matt Gold

Marble Calacatta

Alternative top options

Marble White Silk

Marble Black Sahara

Marble Silver Brown

Marble Bronze Amani

Glass Grey Brown RAL8019

Glass Amaranth RAL3007

For Hall Table Oval è un tavolo realizzato con un piano ellittico con bordi ad ala di gabbiano in pregiato marmo. La struttura si compone di due basi con 8 gambe ciascuna, realizzate in metallo con pregiata finitura oro opaco, disposte con diverse inclinazioni. Spessore piano 2cm. Il tavolo è disponibile anche in versione con top in vetro lucido retrolaccato colore RAL 8019 (spessore 1,2 cm).

For Hall Table Oval is made with an elliptical top with gull-wing edges in precious marble. The structure consists of two bases with 8 legs each, made of metal with high-quality matte gold finish, arranged with different inclinations. Thickness 2cm.
The table is also available in a version with RAL 8019 back-lacquered glossy glass top (1,2 cm thick).

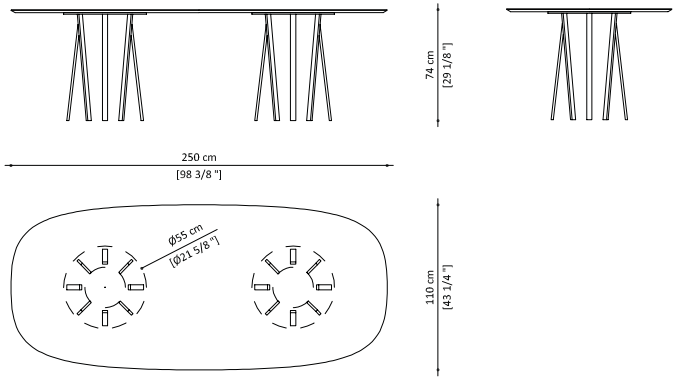

BACKLACQUERED GLASS TOP | TAV.FORH.300G 9.980,00€
Metal base mat gold finished
Backlacquered glass top gloss finish. Colours: col. Grey Brown Ral 8019, Amaranth Ral 3007

WHITE SILK | TAV.FORH.303 16.500,00€
Metal base mat gold finished - White Silk marble matt

SILVER BROWN WAVE | TAV.FORH.300 18.200,00€
Metal base mat gold finished - Silver brown wave marble top

BRONZE AMANI | TAV.FORH.300 18.200,00€
Metal base mat gold finished - Bronze Amani marble top

CALACATTA | TAV.FORH.304 20.400,00€
Metal base mat gold finished - Calacatta marble top

For Hall

Table Squircle

DESIGN | PAOLO CASTELLI

Finishes of the above picture

Metal Finish
Matt Gold

Marble
Black Sahara

Alternative top options

Marble
White Silk

Marble
Silver
Brown

Marble
Bronze
Amani

Marble
Calacatta

È realizzato con un piano quadrato con angoli arrotondati e bordi ad ala di gabbiano in pregiato marmo, spessore 2cm. La base si compone di 8 gambe in metallo con finitura oro opaca, disposte con diverse inclinazioni, fissate al piano tramite una piastra in metallo. Disponibile anche la versione con piano in vetro retrolaccato col. marrone Ral 8019, spessore piano 1,2 cm.

It features a square top with rounded corners and gullwing edges made in marble - 2 cm thick.
The base comprises 8 metal legs with a matt gold finish, set at different angles and anchored to the table top with a metal plate.
Also available the model with glass top - backpainted brown Ral 8019 (1,2 cm thick).

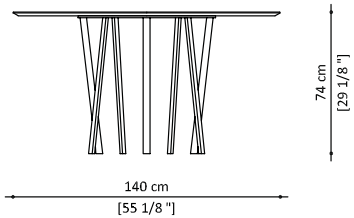

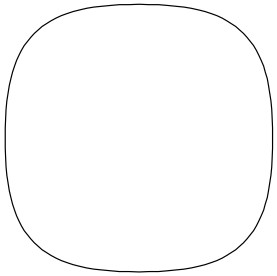

WHITE SILK | TAV.FORH.313 — 9.500,00€
Metal base mat gold finished - White Silk marble matt

MARBLE | TAV.FORH.311 — 10.100,00€
Metal base mat gold finished
Available marbles: Bronze Amani - Black Sahara - Silver Brown Wave

CALACATTA | TAV.FORH.314 — 11.900,00€
Metal base mat gold finished - Calacatta marble top

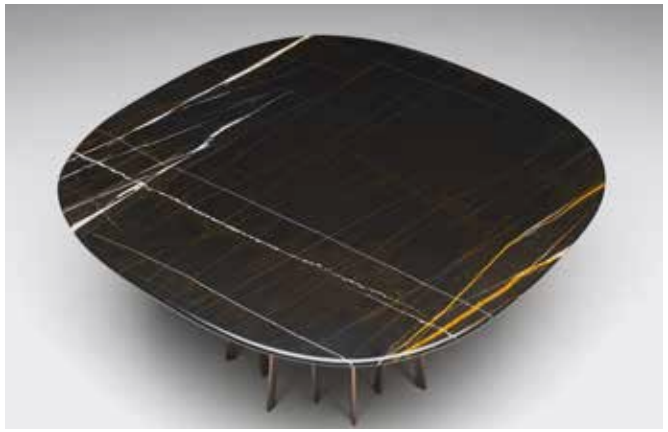

For Hall

Table Circle

DESIGN | PAOLO CASTELLI

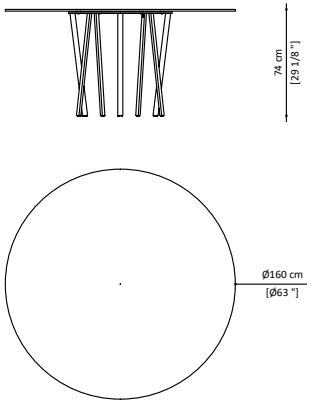

Ø 160 TRANSPARENT GLASS | TAV.FORH.321 6.600,00 €
Metal base matt gold finished - Glass top made in transparent glass - col. Avana

Ø 160 BACKLACQUERED GLASS | TAV.FORH.320 7.050,00 €
Metal base matt gold finished
Backlacquered glass top gloss finish. Colours: col. Grey Brown Ral 8019, Amaranth Ral 3007

Finishes of the above picture

Metal Finish
Matt Gold

Glass
Amaranth
RAL3007

Alternative top options

Glass
Grey
Brown
RAL8019

Transparent
glass col. Avana

È realizzato con un piano circolare in vetro, disponibile in finitura retrolaccata col grigio marrone Ral 8019, o Amaranto Ral 3007, oppure in vetro trasparente color Avana. La base si compone di 8 gambe in metallo con preziosa finitura oro opaca, disposte con diverse inclinazioni. Spessore piano 1,2 cm.

Is made by a circular top made in glass backlacquered col. grey brown Ral 8019,or Amaranth Ral 3007, or in transparent glass col. Avana. The base comprises 8 metal legs with a matt gold finish, set at different angles and anchored to the table top with a metal plate. Top is 1,2 cm thick.

Black & Gold

Table

DESIGN | LUCA SCACCHETTI

Finishes of the above picture

Metal Finish
Matt Flamed
Brass

Laquering
Black
100 gloss

Alternative top options

Laquering
Pearl
100 gloss
NCS S 1500 N

Una collezione dalle forti linee geometriche caratterizzata da un accostamento di materiali inedito e di grande eleganza: uno più naturale, architettonico in metallo e un altro più finito, lucido e decorativo, il laccato nero.
Il grande tavolo rettangolare è composto da un piano in mdf verniciato lucido nero 100 gloss, con bordi dei lati corti leggermente rastremati e quelli dei lati lunghi che sembrano fondersi nelle due basi massicce ed eleganti al tempo stesso, realizzate in metallo pieno con preziosa lavorazione in ottone fiammato opaco. Spessore piano 3,2 cm. Disponibile la versione Pearl & Gold con piano laccato lucido col. bianco perla NCS S 1500N.

A collection of strong geometric lines defined by an unusual and very elegant combination of materials: one more natural, marked, architectural, in metal, and the other more finished, decorative and luxurious, lacquered black.
The large rectangular table has a mdf top with a black 100 gloss lacquered finish with gullwing edges on the shorter sides of the table, and the solid and elegant metal structure parts, with an opaque, iridescent brass finish, inserted along the long sides. Top 3,2 cm thick. Also available the Pearl & Gold model, with white top lacquered 100 gloss NCS S 1500N

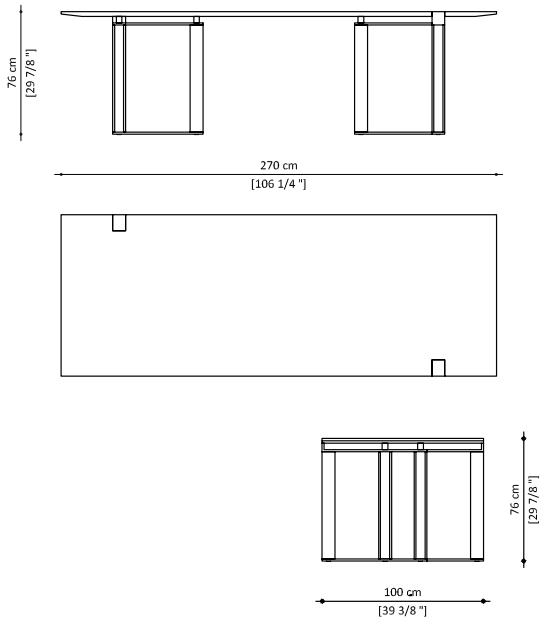

BLACK & GOLD TABLE | TAV.BLAC.320 — 10.600,00€
Mat flamed brass structure - Lacquered top 100 gloss
Available colours: Black Ral 9005, White Pearl NCS S 1500N

◄ Galvanica: prezioso processo di trattamento dell'ottone in grado di conferire allo stesso un'inaspettata tridimensionalità.

Galvanic process: galvanic bath which gives to brass precious three-dimensional effect.

Flora
Table

DESIGN | PAOLO CASTELLI

Finishes of the above picture

Metal Finish
Matt Gold

Marble
White Silk

Alternative top options

Laquering
Black
100 gloss
RAL9005

Laquering
Ivory
100 gloss
RAL1013

Laquering
Grey Brown
100 gloss
NCS
5010Y50R

Laquering
Brown
100 gloss
RAL8019

Laquering
Pearl
100 gloss
NCS S 1500 N

Marble
Calacatta

Flora è un prezioso tavolo dai rimandi naturalistici, con una base intrecciata e realizzata interamente a mano, ideale per arredare eleganti ambienti privati e pubblici.Il tavolo ha una struttura formata da tondini intrecciati tra loro in metallo, finitura oro opaco. La preziosità di questo tavolo è esaltata dal peculiare piano in pregiati marmi. Spessore piano 2cm.

Flora is a precious table with naturalistic references, with a woven base and made entirely by hand, ideal for furnishing elegant private and public environments.
The table has a structure formed by intertwined steel rods, finished in opaque gold. The preciousness of this table is enhanced by the peculiar top in precious marble. Top is 2cm thick.

ROUND

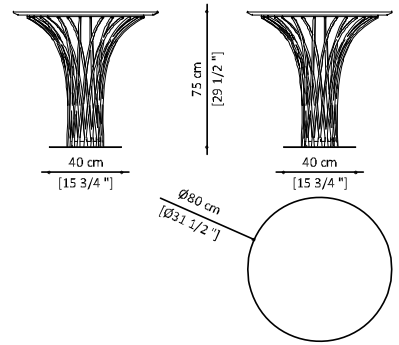

ROUND LACQUERED | TAV.FLOR.300 — 3.200,00€
Top Lacquered 100 Gloss in colours: Black Ral 9005, Ivory Ral1013, Brown grey Ncs 5010 Y50r , Brown Ral 8019
Base in metal mat gold finished

ROUND WHITE SILK | TAV.FLOR.313 — 3.900,00€
Metal base mat gold finished - White Silk marble matt

ROUND CALACATTA | TAV.FLOR.314 — 4.900,00€
Metal base mat gold finished - Calacatta marble top

OVAL

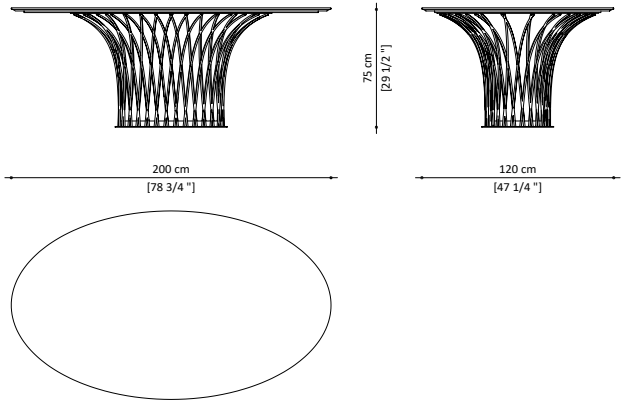

OVAL LACQUERED | TAV.FLOR.320 — 9.600,00€
Top Lacquered 100 Gloss in colours: Black Ral 9005, Ivory Ral1013, Brown grey Ncs 5010 Y50r , Brown Ral 8019 , Pearl NCS S 1500 N
Base in metal mat gold finished

OVAL WHITE SILK | TAV.FLOR.323 — 13.000,00€
Metal base mat gold finished - White Silk marble matt

OVAL CALACATTA | TAV.FLOR.324 — 16.800,00€
Metal base mat gold finished - Calacatta marble top

Nettuno

Desk

DESIGN | VITTORIO PARADISO

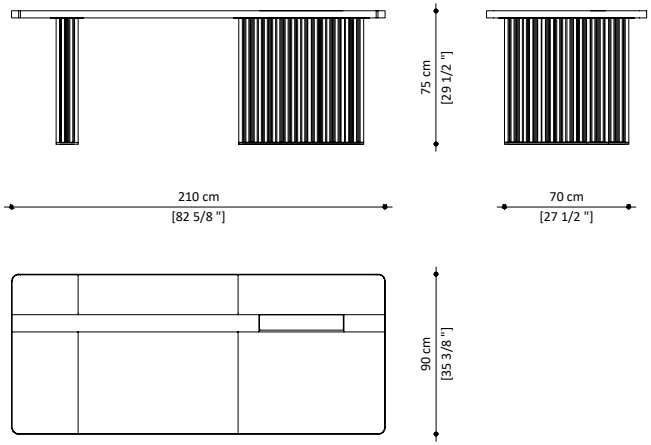

L210 | TAV.NETT.310 15.700,00€

Top in wood covered in full grain leather - Metal perimeter edge finished matt black varnished with matt satin finish gold details
Base in pleated metal with a shiny black nickel finish.

Finishes of the above picture

Metal Finish
Black Nichel
Matt striped

Bovine Leather
Col. 674 Siena

Metal Black
Matt
varnished

Declinazione da ufficio del tavolo Nettuno. Top rivestito in pelle pieno fiore con bordo perimetrale in metallo verniciato nero satinato opaco con dettagli oro satinato opaco, base in metallo plissettato finitura nichel nero lucido. Cassettiera indipendente, completamente rivestita in pelle pieno fiore, apertura push pull e serratura di sicurezza.

Office adaptation of the Nettuno table. Top covered in full grain leather with metal perimeter edges in matt black varnished finish with matt satin golden details, base in pleated metal with a shiny black nickel finish. Independent drawer, completely covered in full grain leather, push-to-open drawer slides and security door lock.

My
Beauty

DESIGN | PAOLO CASTELLI

Finish of the above picture

Laquering
Pearl 100
gloss

Alternative colour options

Laquering
Black
RAL9005
100 gloss

Laquering
Ivory
RAL 1013
100 gloss

Laquering
Grey Brown
NCS5010Y50R
100 gloss

Laquering
Brown
RAL 8019
100 gloss

My Beauty è un grazioso mobile toeletta dedicato all'universo femminile, con una struttura a ponte, ribaltina centrale apribile con specchio illuminato a led, vano centrale rivestito internamente in microfibra, e due cassetti laterali imbottiti e rivestiti in microfibra. E' realizzata interamente in mdf laccato lucido 100 gloss. Su richiesta è disponibile la versione con jewellery box centrale.

My Beauty is a makeup desk dedicated to women, with a bridge structure and central flap concealing a led lit mirror, with central compartement and two side drawers upholstered and lined in microfibre. It is entirely made from mdf with a 100 gloss lacquered finish. Optional jewellery box is available on request.

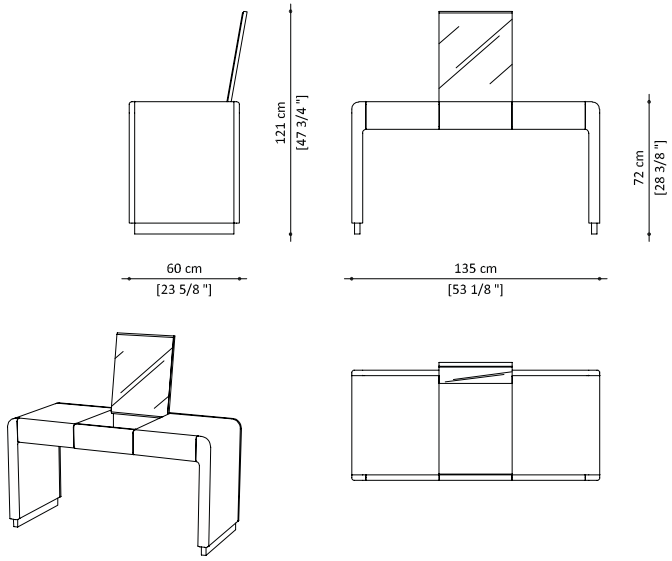

MY BEAUTY | TAV.MYBE.200 — 9.700,00€
Lacquered 100 Gloss in colours: Black Ral 9005, Ivory Ral1013,
Brown grey Ncs 5010 Y50r, Brown Ral 8019, Pearl NCS S 1500 N
Microfiber internal covering

MY BEAUTY WITH JEWELERY BOX | TAV.MYBE.210 — 10.800,00€
Lacquered 100 Gloss in colours: Black Ral 9005, Ivory Ral1013,
Brown grey Ncs 5010 Y50r, Brown Ral 8019, Pearl NCS S 1500 N
Microfiber internal covering
Inner jewellery box with leather details

BDS
Desk

DESIGN | BORROMEODESILVA

Finishes of the above picture

Metal Finish
Matt Gold

Wood
Black Ashwood

Bds Desk è un'elegante scrivania dalle geometrie decise e razionali che bene si sposa con il concetto dell'home office e di un ufficio direzionale qualificato. La scrivania ha una struttura in metallo, dal pregevole disegno, con finitura oro opaco ed un piano attrezzato con cassetto e vani laterali a giorno realizzati in essenza di frassino black. Il cassetto ha apertura push-pull e serratura invisibile. La scrivania è inoltre dotata sul piano di un vano apribile per l'inserimento di apposite prese di corrente. In una delle gambe della struttura può scorrere il filo elettrico delle prese.

Bsd Desk is an elegant desk, boasting bold and rational lines, that will complement home offices as well as elegant corporate spaces.
The desk features a metal structure, boasting a fine design and a matt gold finish, and a black ash top with a drawer and open compartments on the sides. The drawer has a push-pull opening mechanism and invisible lock. The desk also has a side compartment on the top to allow to plug devices into wall sockets.
Electric cables can run through one of the legs.

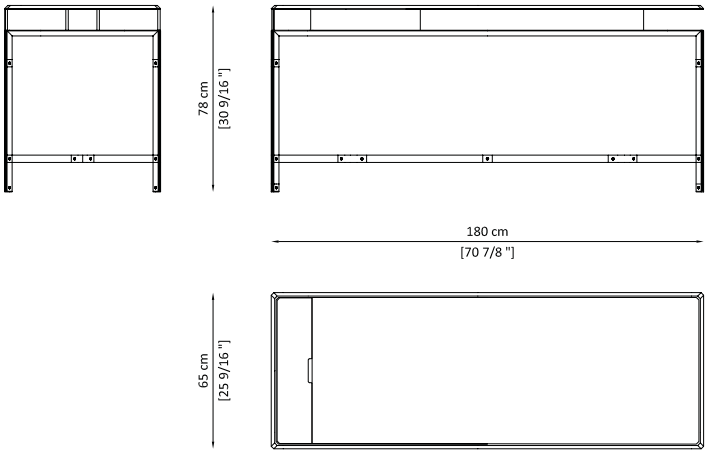

BDS DESK | TAV.BDST.310
Wooden top black ash
Base in metal mat gold

12.300,00€

◄ Predisposizione salita cavi tramite una delle gambe della scrivania.

Electrical cables can pass through the metal structure.

Soft Ratio
Coffee Table

DESIGN | PAOLO CASTELLI

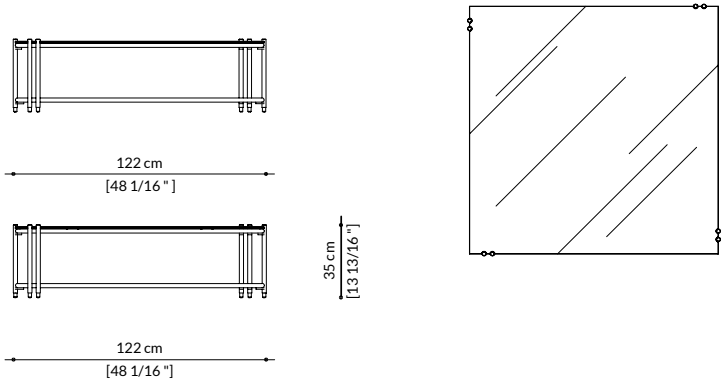

Finishes of the above picture

Metal Finish
Matt Bronzed
Brass

Metal Black
Matt
varnished

Transparent
glass col. Avana
(top)

Pece
Stone

2 SHELVES STONE | TAV.SOFT.111 4.200,00€
Metal base matt black finish with double metal feet matt bronzed brass finish
Top made in transparent glass col. Avana
Shelf in Pece stone

Elegante tavolino che completa la proposta living e ben si abbina alla linea di contenitori e divani Soft Ratio. La base in metallo finitura nero opaco con doppi piedini in metallo finitura bronzo ottone opaco, evidenzia la leggerezza complessiva del progetto, sostenendo il ripiano superiore in vetro trasparente color Avana e quello inferiore in pietra Pece o in alternativa rivestito in pelle col. 602 testa di moro. Disponibile anche la versione a 1 ripiano in vetro col. Avana.

Elegant coffee table that completes the living proposal and well coordinates with the Soft Ratio line of containers and sofas. The metal base matt black finish with double metal feet matt bronzed brass finish, highlights the overall lightness of the project, supporting the top Havana coloured transparent glass, and the lower shelf in Pece stone or alternatevely covered in leather col. 602 dark brown. Also available with one shelf in glass col. Avana.

For Hall
Coffee Table

DESIGN | PAOLO CASTELLI

A B C

Finishes of the above picture

Metal Finish Matt Gold

Marble White Silk

Marble Calacatta

Marble Bronze Amani

Available marbles

Marble Black Sahara

Marble Silver Brown

I For Hall Coffee Tables sono una serie originale e preziosa di tavolini bassi, congeniali ad arredare spazi living, anche in composizioni con più elementi combinati tra loro. Sono composti da un piano realizzato in prezioso marmo e una base con gambe in metallo con finitura oro opaco.

The For Hall Coffee Tables are a range of original and elegant low tables, ideal to furnish living spaces also in combination with other elements. The top is made in marble and the base has legs made in metal with a matt gold finish.

A

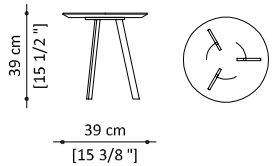

MARBLE | TAV.FORH.110 2.050,00 €
Marble top - metal base mat gold finished
Available marbles: Bronze Amani - Sahara Noir - Silver Brown Wave - White Silk

CALACATTA | TAV.FORH.114 2.500,00 €
Marble top Calacatta - metal base mat gold finished

B

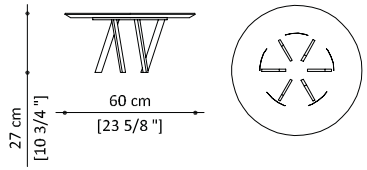

MARBLE | TAV.FORH.120 3.100,00 €
Marble top - metal base mat gold finished
Available marbles: Bronze Amani - Sahara Noir - Silver Brown Wave - White Silk

CALACATTA | TAV.FORH.124 3.400,00 €
Marble top Calacatta - metal base mat gold finished

C

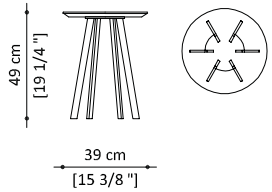

MARBLE | TAV.FORH.130 2.500,00 €
Marble top - metal base mat gold finished
Available marbles: Bronze Amani - Sahara Noir - Silver Brown Wave - White Silk

CALACATTA | TAV.FORH.134 2.950,00 €
Marble top Calacatta - metal base mat gold finished

For Hall
Coffee Table

DESIGN | PAOLO CASTELLI

D

E

Finishes of the above picture

Metal Finish
Matt Gold

Marble
Black Sahara

Alternative marble options

Marble
White Silk

Marble
Silver
Brown

Marble
Bronze
Amani

Marble
Calacatta

Available glass options for model E

Glass
Grey
Brown
RAL8019

Glass
Amaranth
RAL3007

Sono composti da un piano realizzato in prezioso marmo e una base con gambe in metallo con finitura oro opaco. Il modello E è proposto anche con piano in vetro.

The top is made in marble and the base has legs made in metal with a matt gold finish. Model E is available also with glass top.

D

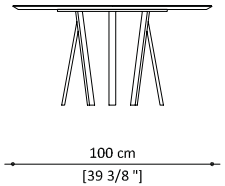

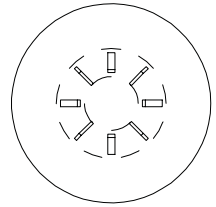

WHITE SILK | TAV.FORH.143 — 4.900,00 €
Marble top White Silk matt or polished- metal base mat gold finished

MARBLE | TAV.FORH.140 — 6.000,00 €
Marble top - metal base mat gold finished
Available marbles: Bronze Amani - Sahara Noir - Silver Brown Wave

CALACATTA | TAV.FORH.144 — 7.050,00 €
Marble top Calacatta - metal base mat gold finished

E

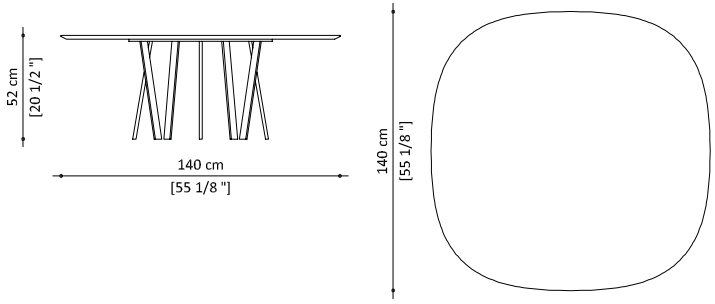

LACQUERED GLASS | TAV.FORH.150G — 6.300,00 €
Backlacquered glass top 100 gloss - metal base mat gold finished
Available colors: Brown 100gloss RAL8019 - Amaranth RAL 3007

MARBLE WHITE SILK | TAV.FORH.153 — 8.500,00 €
Marble top White Silk matt or polished- metal base mat gold finished

Elle
Coffee Table

DESIGN | LUCA SCACCHETTI

RECTANGULAR SQUARE 50 SQUARE 80

Finishes of the above picture

Metal Finish
Matt Gold

Bronze
Mirrored Glass
Matt

Elle Collection Coffee Table è un tavolino basso ideale per arredare salotti e zone living, nelle due proposte quadrata e rettangolare. La struttura è in metallo con finitura oro opaco satinato e top realizzato in vetro specchiato satinato color bronzo.

Elle Collection Coffee Table is a low table ideal in sitting rooms and living rooms, offered in both square and rectangular versions. The structure is made in metal with mat gold finishing, top is made in bronze mirrored glass matt.

SQUARE 50

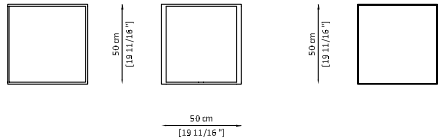

BRONZE MIRRORED GLASS | TAV.ELLE.132 1.870,00€
Bronze mirrored glass mat top - metal base mat gold finished

SQUARE 80

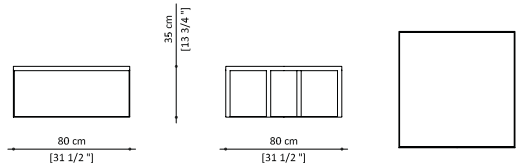

BRONZE MIRRORED GLASS | TAV.ELLE.112 2.390,00€
Bronze mirrored glass mat top - metal base mat gold finished

RECTANGULAR

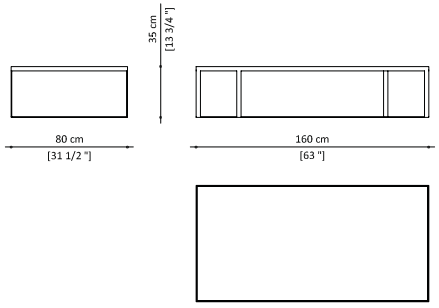

RECTANGULAR | TAV.ELLE.122 3.345,00€
Bronze mirrored glass mat top - metal base mat gold finished

Inspiration
Fine furniture and lighting

Dione
Coffee Table

DESIGN | PAOLO CASTELLI

A C B

Finishes of the above picture

3D Striped Ceramic from Vietri

Metal Finish Matt Gold

Marble Calacatta

Alternative top option

Marble White Silk

A - E' composto da base in ceramica di forma slanciata e piano in metallo oro opaco spazzolato, di spessore 3 mm. Basamento in metallo verniciato oro opaco.
B - Ha una base compatta in ceramica sormontata da un grande piano in marmo Calacatta con bordo spizzato di spessore 20 mm, al centro del quale è inserito un disco metallico in ottone satinato opaco. Basamento in metallo verniciato oro opaco. Disponibile anche con top in marmo bianco White silk opaco.
C - E' composto da base in ceramica e piano in marmo Calacatta con bordo spizzato di spessore 20 mm, che accoglie un inserto ad anello in metallo finitura oro opaco spazzolato. Basamento in metallo finitura oro opaco. Disponibile anche con top in marmoWhite Silk opaco.

A – Is composed of a ceramic base in slim shape and a metal top in mat gold finish, 3mm thick. The lower base is in metal mat gold finished.
B – Has a solid base on which a wide slab of Calacatta marble with 45° edges 20 mm thick stands. In the centre lies a metallic plate in mat gold finish. The lower base is in metal mat gold finish. Available also with top in marble White silk matt.
C - Is composed of a ceramic base and a top in Calacatta marble with 45° edges 20mm thick. It includes a ring shape metallic insert in finish mat gold. The lower base is in metal mat gold finish. Available also with top in marble White silk matt.

A

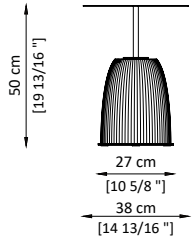

A | TAV.DION.110 — 2.835,00€
Mat gold top- 3D Ceramic base

B

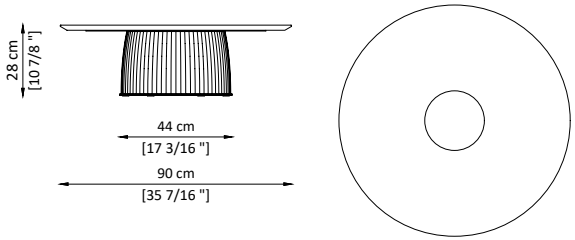

WHITE SILK | TAV.DION.121 — 6.010,00€
Marble top White Silk matt - mat brass details - 3D Ceramic base

CALACATTA | TAV.DION.120 — 7.700,00€
Marble top Calacatta - mat brass details - 3D Ceramic base

C

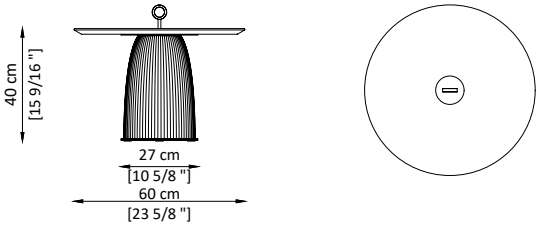

WHITE SILK | TAV.DION.131 — 4.800,00€
Marble top White Silk matt - mat brass details - 3D Ceramic base

CALACATTA | TAV.DION.130 — 5.550,00€
Marble top Calacatta - mat brass details - 3D Ceramic base

▲

Ceramica artigianale realizzata e modellata a mano presso antichi laboratori a Vietri.

Handmade artisan ceramic manually operated in antique Vietri laboratories.

Lens
Coffee Table

DESIGN | VITTORIO PARADISO

archiproducts DESIGN SELECTION 2021

Ø45 Ø60

Finishes of the above picture

Vicenza Stone
Col. Ivory
Honed

Muranese glass
Col. Petrol Green

Muranese glass
Col. Brown Funè

Tavolini con base in pietra vicentina levigata col. avorio formata da tre lastre verticali fissate a un disco centrale. Piano realizzato in vetro di Murano soffiato a bocca, con effetto ondulato interno che impreziosisce l'oggetto. Sottotop convesso che consente di incastonare il piano in vetro all'interno dell'alloggiamento della base.

Coffee tables with base in Vicenza stone honed col. Ivory composed by three vertical slabs fixed to a central disc. Top made of mouth-blown Murano glass, with an internal wavy effect that embellishes the object. A convex undertop allows the embedment of the glass top inside the base housing.

Ø45

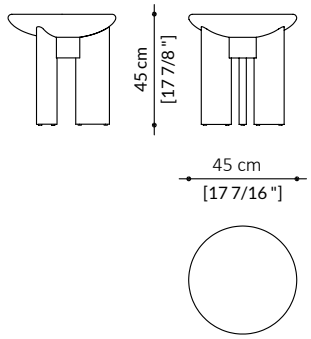

Ø45 | TAV.LENS.100 2.800,00€
Base in Vicenza stone col. Ivory honed
Top made in handmade Muranese glass. Colour: Petrolio (Petrol Green)

Ø60

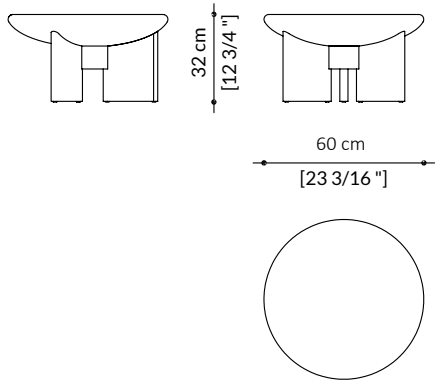

Ø60 | TAV.LENS.120 3.200,00€
Base in Vicenza stone col. Ivory honed
Top made in handmade Muranese glass. Colour: Fumè (Brown Fumè)

Claude
Coffee Table

DESIGN | VITTORIO PARADISO

A B C

Finishes of the above picture

Metal Finish
Polished Gold

Marble
Botanic Green

Alternative top option

Marble
Calacatta

L'ispirazione deriva dai famosi quadri "ninfee" dell'artista impressionista Claude Monet. Così è nata la serie di elementi di servizio, composta da tre varianti, da utilizzare come piano d'appoggio in numerose situazioni. Morbidezza e rigidità, accostamento di materiali a contrasto. Sono i dettagli che creano i movimenti impercettibili nell'andamento delle forme. Le basi in metallo con finitura oro lucido sorreggono mutevoli scorci di lago in marmo botanic green che si rastremano lievemente nella parte inferiore smussando la loro geometria; forme morbide, calibratissime, dettagli accurati.

The inspiration comes from the famous "water-lilies" paintings of the impressionist artist Claude Monet. This gave birth to the series of serving elements consisting of three variants to be used as trivets in various situations. Softness and rigidity, matching of contrasting materials. These are the details that create imperceptible movements in the progression of the forms. The metal bases in shiny gold finish support mutating glimpses of lake in botanic green marble which lightly taper off in the lower part, smoothing their geometry; soft forms, highly calibrated, fine details.

A

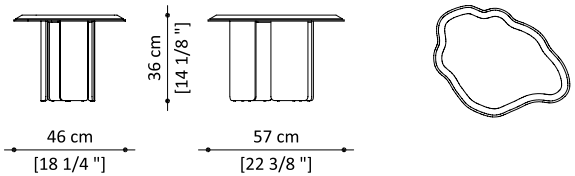

BOTANIC GREEN | TAV.CLAU.110 — 4.450,00€
Metal base polished gold finished
Top marble Botanic Green

CALACATTA | TAV.CLAU.140 — 4.450,00€
Polished gold finish base
Top marble Calacatta

B

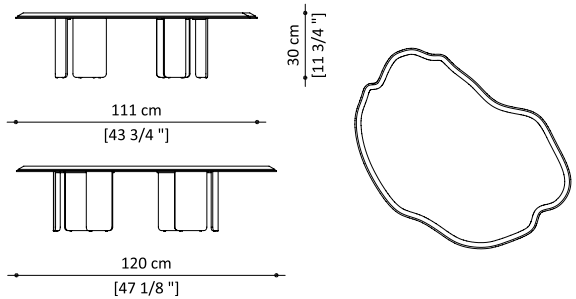

BOTANIC GREEN | TAV.CLAU.120 — 8.500,00€
Metal base polished gold finished
Top marble Botanic Green

CALACATTA | TAV.CLAU.150 — 8.500,00€
Polished gold finish base
Top marble Calacatta

C

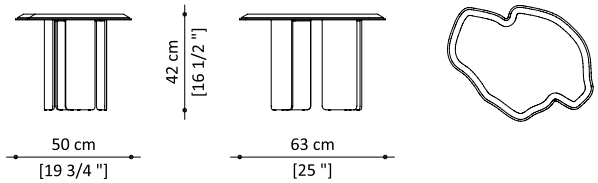

BOTANIC GREEN | TAV.CLAU.130 — 4.650,00€
Metal base polished gold finished
Top marble Botanic Green

CALACATTA | TAV.CLAU.160 — 4.650,00€
Polished gold finish base
Top marble Calacatta

◄ Botanic green: pregiata quarzite proveniente dal Brasile di un intenso colore verde brillante.

Botanic green: brilliant green Brazilian quartzite stone.

Imperfect
Coffee Table

DESIGN | PAOLO CASTELLI

SIDE GLASS MARBLE METAL

Finishes of the above picture

Metal Finish
Polished Gold
(Side and Metal model)

Marble
Rosa Egeo
(Side and Marble model)

Transparent glass col. Avana
(Side and Glass model)

SIDE - Tavolino realizzato con tre materiali diversi. Top in vetro trasparente col. Avana, una gamba in marmo Rosa Egeo e l'altra in metallo finitura oro lucido.

GLASS - Tavolino composto da lastre di vetro trasparente col. Avana.

MARBLE - Tavolino in marmo con struttura in legno, rivestito con lastre di marmo Rosa Egeo. Zoccolo realizzato in legno impiallacciato tinto scuro.

METAL - Tavolino realizzato con 3 lastre di metallo, posizionate ad incastro, in finitura oro lucido.

SIDE - Coffee table made with three different materials. Transparent glass top col. Havana, one leg in Rosa Egeo marble and the other in polished gold.

GLASS - Coffee table made by transparent glass col. Avana.

MARBLE - Marble coffee table with wooden frame covered with marble slabs Rosa Egeo marble. Hidden base made of dark stained veneered wood.

METAL - Coffee table made with 3 metal plates, interlocked, in polished gold.

SIDE

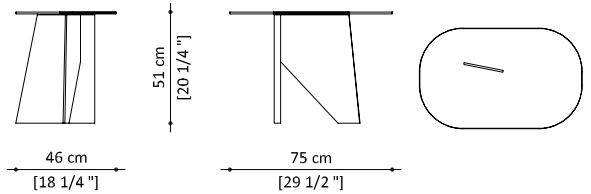

ROSA EGEO | TAV.IMPE.140 — 3.400,00€
Glass col. Avana top
Base made in Rosa Egeo marble and metal polished gold

GLASS

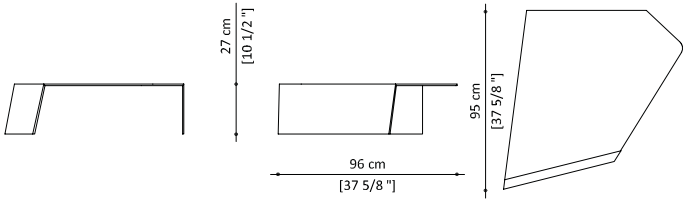

GLASS | TAV.IMPE.120 — 2.500,00€
Transparent glass col. Avana

MARBLE

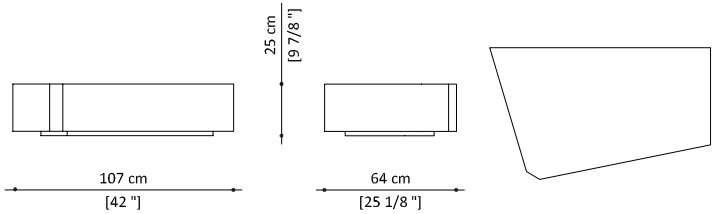

ROSA EGEO | TAV.IMPE.110 — 8.160,00€
Marble Rosa Egeo

METAL SHINE GOLD

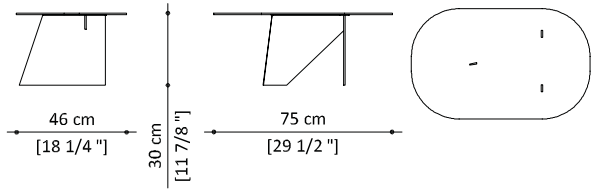

METAL SHINE GOLD | TAV.IMPE.130 — 3.300,00€
Metal polished gold finish

◄ Raffinati accostamenti di materiali nobili.

Noble materials tastefully juxtaposed.

Nettuno
Coffee Table

DESIGN | VITTORIO PARADISO

L105 L120

Finishes of the above picture

Metal Finish
Polished Bronze
Shadow Striped

Bronze Mirrored
Glass Matt

Transparent
glass col. Avana
Satin

Alternative base option

Metal Finish
Polished Gold
Striped

Alternative top options

Glass
Grey
Brown

Glass
Amaranth

Collezione di tavolini caratterizzati da una sofisticata semplicità delle linee, declinata in una scelta di materiali di grande pregio per suggerire un modo diverso di pensare lo spazio abitato. Top in vetro bronzato con un lato parzialmente specchiato, o in alternativa retrolaccato, base in metallo plissettato finitura lucida bronze shadow o oro.

Collection of coffee tables featuring a sophisticated simplicity of lines, offered with a choice of high quality materials to present a different way of conceiving a living space. Top in bronzed glass with one side partially mirrored (also available the backlaquered glass top) base in pleated metal with a polished finish bronze shadow or gold.

L105 backlaquered glass top bronzed mirrored glass top

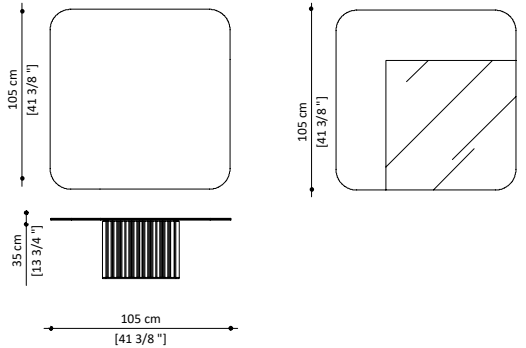

L105 BACKLAQUERED GLASS | TAV.NETT.120 3.900,00€
Backlaquered glass top - Brown 100gloss RAL8019 - Amaranth RAL 3007
Plissè metal base, polished gold finish or bronze shadow

L105 BRONZED GLASS | TAV.NETT.121 4.200,00€
Bronzed glass top with mirrored insert
Plissè metal base, polished gold finish or bronze shadow

L120 backlaquered glass top bronzed mirrored glass

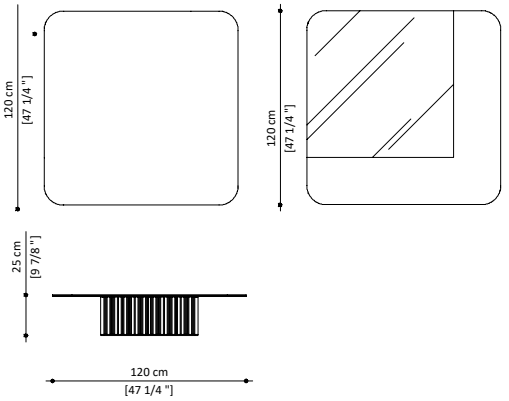

L120 BACKLAQUERED GLASS | TAV.NETT.110 3.980,00€
Backlaquered glass top - Brown 100gloss RAL8019 - Amaranth RAL 3007
Plissè metal base, polished gold finish or bronze shadow

L120 BRONZED GLASS | TAV.NETT.111 4.500,00€
Bronzed glass top with mirrored insert
Plissè metal base, polished gold finish or bronze shadow

◄ Top in vetro bronzato con un lato parzialmente specchiato.

Top in bronzed glass partially mirrored.

Inspiration
Fine furniture and lighting

Ribbon
Coffee Table

DESIGN | PAOLO CASTELLI

Finishes of the above picture

Matt Brass

Saffiano Laquering Orange

Saffiano Laquering Bordeaux

Saffiano Laquering Green

Saffiano Laquering Bronze

Una sinfonia di linee ondulate in ottone verniciato opaco, che sorreggono un piano, in mdf laccato con preziosa finitura Saffiano a più strati.
I tavolini Ribbon coffee table sono pensati come elementi di servizio alla zona living, inoltre sono facilmente adattabili a contesti differenti grazie alla loro misurata eleganza e alla pluralità di forme e altezze disponibili.

A symphony of undulating lines in mat varnished brass supporting a mdf lacquered top with Saffiano finishing.
The Ribbon coffee tables are designed as service elements in the living area, while they are easily adaptable to different contexts thanks to their measured elegance and the plurality of available forms and heights.

A

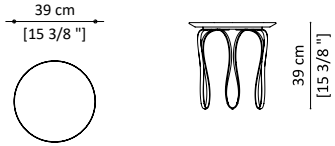

SAFFIANO | TAV.RIBB.110 — 2.500,00€
Base in brass matt finish - Lacquered top Saffiano finish 100 gloss
Available colours: Bronze, Orange , Green, Bordeaux

C

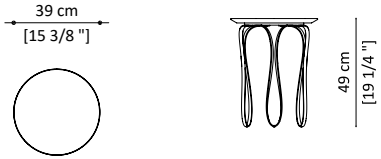

SAFFIANO | TAV.RIBB.130 — 2.500,00€
Base in brass matt finish - Lacquered top Saffiano finish 100 gloss
Available colours: Bronze, Orange , Green, Bordeaux

B

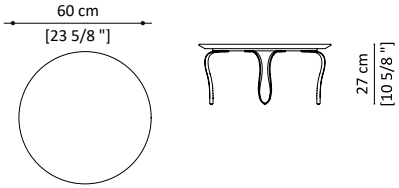

SAFFIANO | TAV.RIBB.120 — 3.300,00€
Base in brass matt finish - Lacquered top Saffiano finish 100 gloss
Available colours: Bronze, Orange , Green, Bordeaux

D

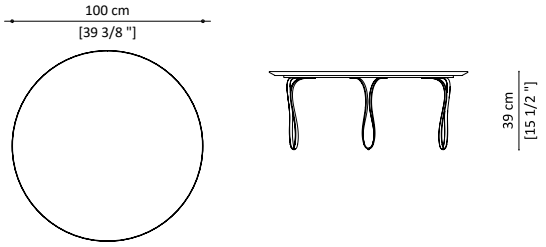

SAFFIANO | TAV.RIBB.140 — 5.500,00€
Base in brass matt finish - Lacquered top Saffiano finish 100 gloss
Available colours: Bronze, Orange , Green, Bordeaux

Inspiration

Fine furniture and lighting

PAOLO CASTELLI

Console

Console Tables

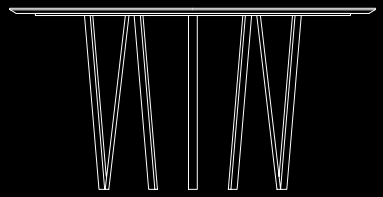

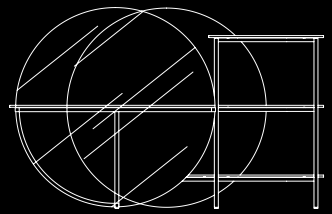

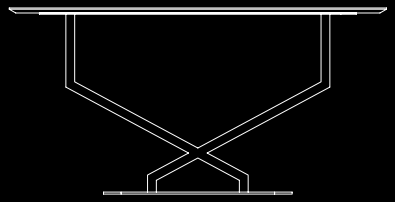

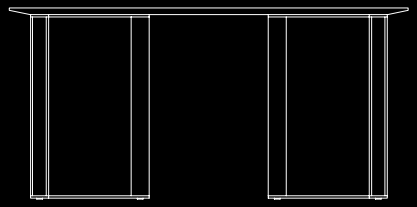

For Hall

Console

DESIGN | PAOLO CASTELLI

Finishes of the above picture

Metal Finish
Matt Gold

Marble
Bronze
Amani

Alternative top options

Marble
White
Silk

Marble
Black
Sahara

Marble
Silver
Brown

Marble
Calacatta

È realizzato con un piano ovale e angoli ad ala di gabbiano in pregiato marmo. La base si compone di 7 gambe in metallo con finitura oro opaco, disposte con diverse inclinazioni e saldate a un disco di fissaggio in metallo che viene fissato al piano tramite viti metalliche. Spessore piano 2 cm.

It comprises an oval-shaped top with rounded corners in precious marble. The base features 7 metal legs with a matt gold finish, set at different angles and welded onto a metal disk that is fixed to the table top with metal screws. Top thick 2 cm.

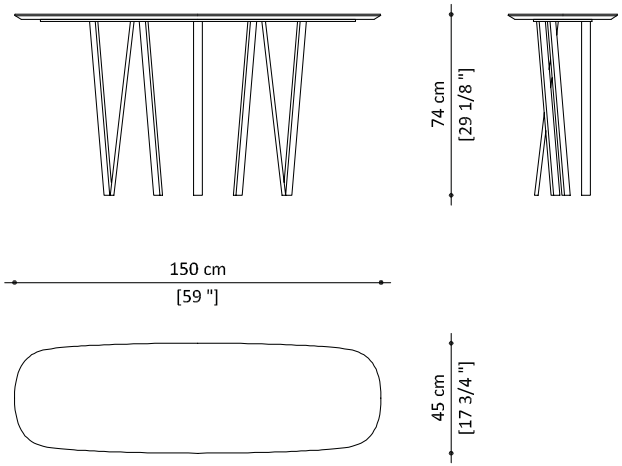

WHITE SILK | TAV.FORH.202 — 6.470,00€
Mat gold finish base
White Silk marble matt

MARBLE | TAV.FORH.201 — 7.030,00€
Mat gold finish base
Available marbles: Bronze Amani, Silver Brown Wave, Black Sahara

CALACATTA | TAV.FORH.204 — 8.170,00€
Mat gold finish base
Calacatta marble top

Cultum
Console

DESIGN | PAOLO CASTELLI

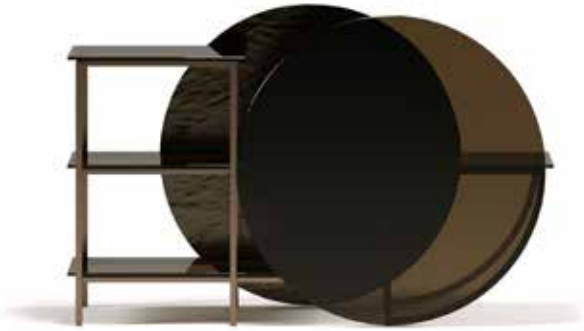

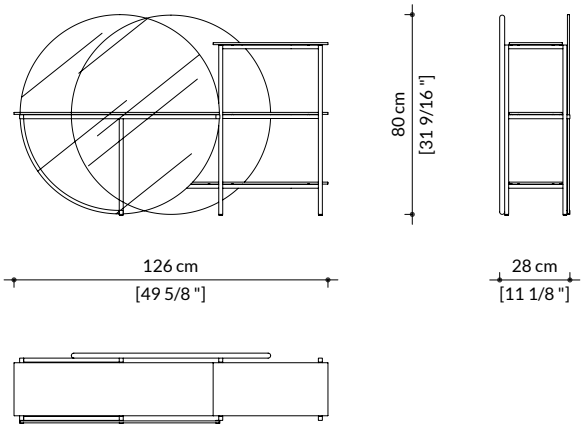

MIRRORED UNDULATED GLASS | TAV.CULT.200 — 3.750,00€
Metal frame matt bronze shadow finished-
Shelves and front disc made in transparent glass col. Avana
Back disc made in mirrored undulated backlaquered glass col. Avana

PECE STONE | TAV.CULT.210 — 5.160,00€
Metal frame matt bronze shadow finished - Back disc made in Pece stone
Shelves and front disc made in transparent glass col. Avana

Finishes of the above picture

Metal Finish Bronze Shadow Mat

Transparent glass col. Avana

Pece Stone

Cultum console è un linguaggio polimaterico, non il design di un complemento ma lo sviluppo di un'idea che si fa gesto.
Struttura in metallo finitura bronze shadow opaco, con ripiani e disco anteriore in vetro temperato col. Avana (sp. 6 mm). Il disco posteriore -disponibile in pietra pece oppure in vetrofuso ondulato retrolaccato col. Avana- definisce i confini tridimensionali di questo oggetto multiforme.

Cultum console is a multi-material language, achieved not by designing a piece of furniture but by developing an idea into a gesture.
Metal structure with a matt bronze shadow finish, with tempered glass shelves and front disc (6 mm thick). Back disc -available in Pece stone or in mirrored undulated glass col. Avana- defines the three-dimensional boundaries of this multiform object.

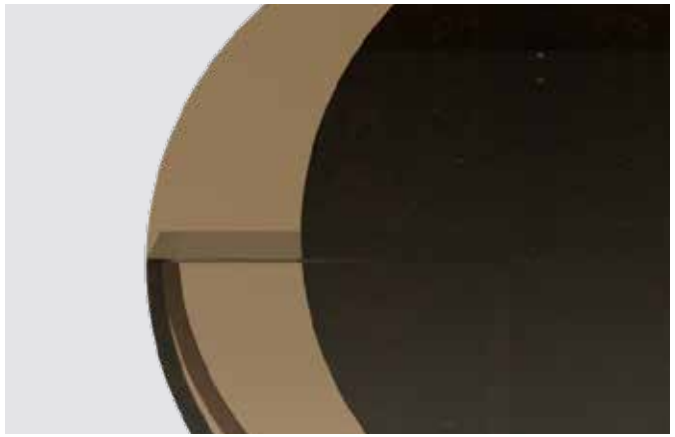

Reverse
Console

DESIGN | PAOLO CASTELLI

Finishes of the above picture

Metal Finish
Matt Gold

Wood
Dark oak

Marble
Black Sahara

Alternative top options

Marble
White Silk

Marble
Bronze
Amani

Marble
Calacatta

Console dal disegno apparentemente semplice in cui la base incrociata alterna gambe in metallo trattato con finitura oro opaco e gambe in rovere cotto.
La proposta di abbinamenti materici all'insegna di un'inedita eleganza prosegue nella scelta del piano in marmo dallo spessore di 2 cm.
Linee e materiali ridefiniscono l'estetica degli anni "ruggenti" che, contaminata dalla sensibilità contemporanea della collezione Inspiration, contribuisce a dare prestigio e luminosità all'ambiente in cui è inserito.

Of apparently simple design, the base of the console alternates legs in finish mat gold treated metal and in dark stained oak.
The proposal of materic matching in the name of an unprecedented elegance proceeds in the choice of the top in 2 cm thick in marble. Lines and materials redefine the aesthetics of the "roaring" years which, intermingled with the contemporary sensibility of the Inspiration collection, contributes to lending prestige and luminosity to its setting.

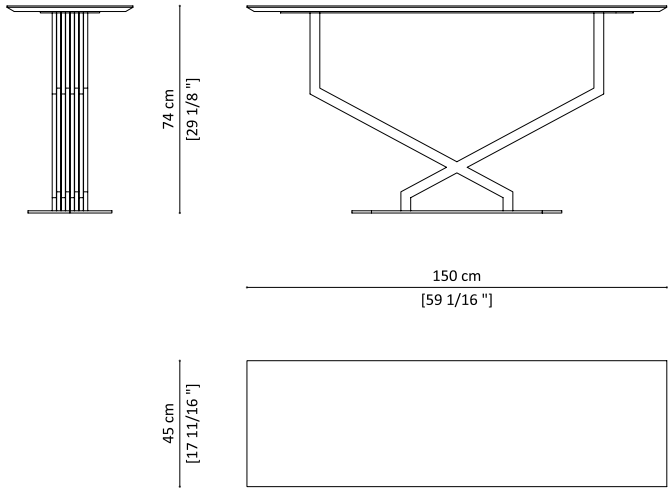

WHITE SILK | TAV.REVE.203 — 7.825,00€
Marble top, mat gold finished metal base with dark stained oak inserts
White Silk marble matt or polished

BLACK SAHARA | TAV.REVE.201 — 8.165,00€
Marble top, mat gold finished metal base with dark stained oak inserts
Black Sahara marble top

BRONZE AMANI | TAV.REVE.202 — 8.390,00€
Marble top, mat gold finished metal base with dark stained oak inserts
Bronze Amani marble top

CALACATTA | TAV.REVE.204 — 9.415,00€
Marble top, mat gold finished metal base with dark stained oak inserts
Calacatta marble top

Black & Gold
Console

DESIGN | LUCA SCACCHETTI

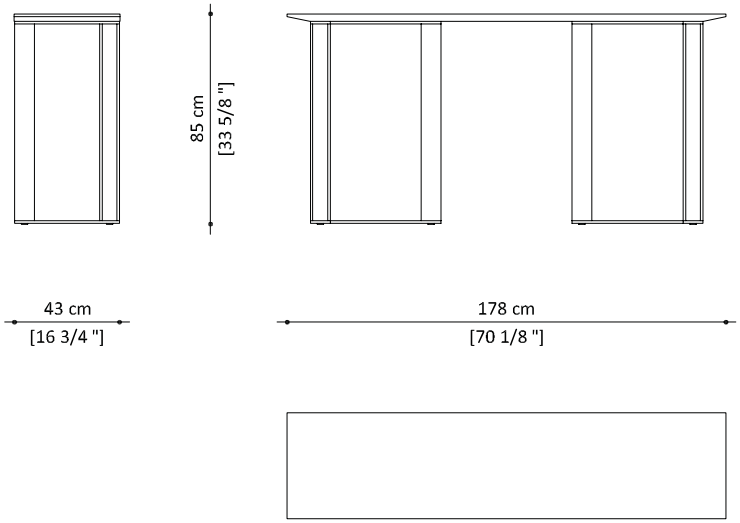

BLACK & GOLD CONSOLE | TAV.BLAC.200 — 6.350,00€
Mat flamed brass structure - Lacquered top 100 gloss
Available colours: Black Ral 9005, White Pearl NCS S 1500N

Finishes of the above picture

Metal Finish
Matt Flamed
Brass

Laquering
Black
100 gloss

Alternative top options

Laquering
PEARL
100 Gloss
NCS S 1500 N

La console Black & Gold Console, esalta l'accostamento di materiali inedito e di grande eleganza: uno più naturale, macchiato, architettonico in metallo e un altro più finito, lucido, decorativo e lussuoso, il laccato nero, spessore 3.2 cm. Si tratta di una console con un piano in mdf verniciato lucido nero 100 gloss, con i lati corti dal bordo inferiore leggermente rastremato, e una doppia base realizzata in metallo pieno con elegante lavorazione in ottone fiammato opaco. Disponibile la versione Pearl & Gold con piano laccato lucido col. bianco perla NCS S 1500N.

The Black & Gold Console is defined by an unusual and very elegant combination of materials: one more natural, marked, architectural, in metal, and the other more finished, shiny, decorative and luxurious, lacquered black, 3,2 cm thick.
It features a mdf top with a black 100 gloss lacquered finish; the bottom edge of the short ends are slightly flared and the double base is made of solid metal with a burnished matt brass finish.
Top 3,2 cm thick. Also available the Pearl & Gold model, with white top lacquered 100 gloss NCS S 1500N.

Galvanica: prezioso processo di trattamento dell'ottone in grado di conferire allo stesso un'inaspettata tridimensionalità.

Galvanic process: galvanic bath which gives to brass precious three-dimensional effect.

Sean
Console

DESIGN | PAOLO CASTELLI

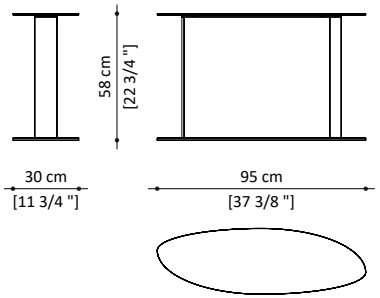

BACKLACQUERED GLASS | TAV.SEAN.200 — 3.065,00 €
Matt satin gold finish base - Polished black nickel structure
Bronze mirrored glass matt top

Finishes of the above picture

Metal Finish
Matt Gold

Metal Finish
Polished
Black Nickel

Bronze
Mirrored Glass Matt

Console caratterizzata da una sofisticata semplicità delle linee, declinata in una scelta di materiali di grande pregio. Basamento in trafilati finitura oro satinato opaco, struttura in tubolare ellissoidale nichel nero lucido e top di forma ovale in specchio color bronzo satinato.

Console featuring a sophisticated simplicity of lines, offered with a choice of high quality materials. Base with a drawn matt gold finish, structure in ellipsoidal tubular shiny black nickel polished and oval top in broze mirrored glass matt.

Inspiration

Fine furniture and lighting

PAOLO CASTELLI

Sedute
Chairs

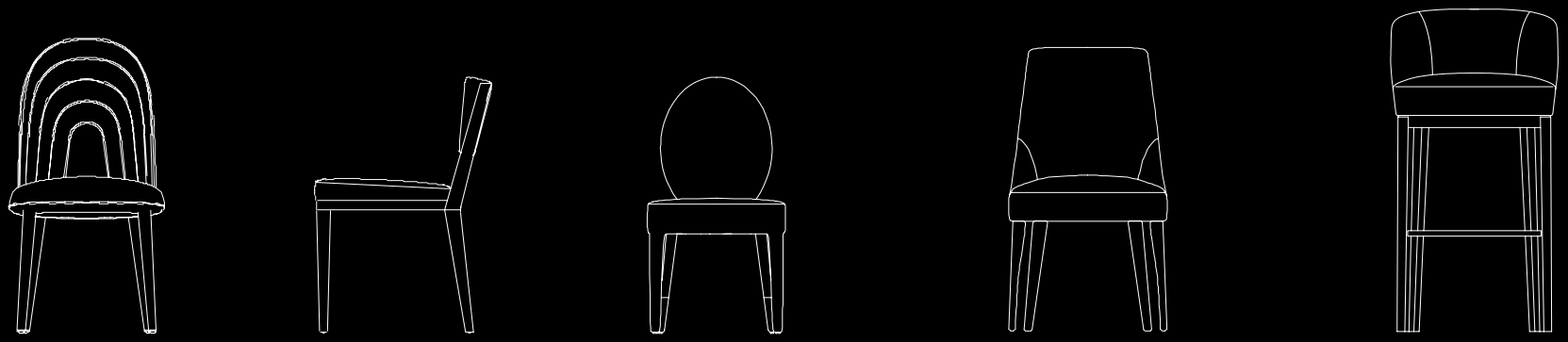

Sofia
Chair

DESIGN | PAOLO CASTELLI

Finishes of the above picture

Polished brass

Fabric Superior Velvet Sig Col. 42 Green

Sofia è una sofisticata e confortevole seduta che rivisita, nelle sue forme, il design degli anni '30, per adattarsi ad ogni contesto abitativo o spazio collettivo con uno spiccato appeal estetico.
La seduta ha un telaio in legno multistrato curvato e imbottitura in poliuretano espanso sagomato a quote differenziate, mentre le gambe in legno di faggio sono rivestite nel medesimo rivestimento con un prezioso puntale in ottone lucido nelle gambe posteriori. Sofia è interamente rivestita in pregiati velluti non sfoderabili, pelle bovine e nabuk. Sofia è disponibile nel modello con e senza braccioli. Non sfoderabile.

Sofia is a sophisticated and comfortable chair, with a shape reminiscent of the design of the 1930s, which adapts to every living context or collective space with a high level of visual appeal.
Its structure is made of curved multi-layer wood, padded in different density expanded polyurethane, while the legs are beech wood and have the same upholstering as the chair. The back legs feature a metal insert in polished brass. Sofia can be completely upholstered in nonremovable elegant velvets, fine leather or nubuck. Sofia is available in both without and with armrests. Unremovable covering.

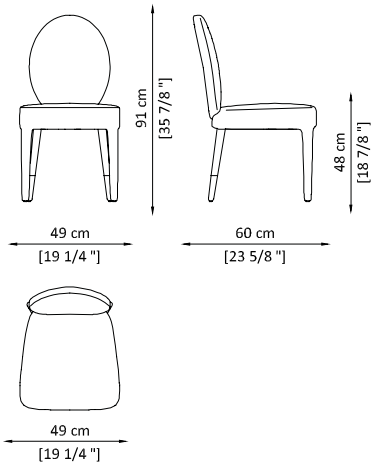

ECOLEATHER | SED.SOFI.700.ECO — 1.815,00€
Polished gold feets
Eco-Friendly Leather

VELVET SUPERIOR | SED.SOFI.700.SUP — 1.930,00€
Polished gold feets
Velvet Superior

LEATHER | SED.SOFI.700.PEL — 2.155,00€
Polished gold feets
Bovine Leather

NABUK | SED.SOFI.700.NAB — 2.500,00€
Polished gold feets
Nabuk

Sofia

With arms

DESIGN | PAOLO CASTELLI

Finishes of the above picture

Polished brass

Fabric Superior Velvet Sig Col. 20 Bordeaux

Sofia è una sofisticata e confortevole seduta che rivisita, nelle sue forme, il design degli anni '30, per adattarsi ad ogni contesto abitativo o spazio collettivo con uno spiccato appeal estetico.
La seduta ha un telaio in legno multistrato curvato e imbottitura in poliuretano espanso sagomato a quote differenziate, mentre le gambe in legno di faggio sono rivestite nel medesimo rivestimento con un prezioso puntale in ottone lucido nelle gambe posteriori. Sofia è interamente rivestita in pregiati velluti non sfoderabili, pelle bovine e nabuk. Sofia è disponibile nel modello con e senza braccioli. Non sfoderabile.

Sofia is a sophisticated and comfortable chair, with a shape reminiscent of the design of the 1930s, which adapts to every living context or collective space with a high level of visual appeal.
Its structure is made of curved multi-layer wood, padded in different density expanded polyurethane, while the legs are beech wood and have the same upholstering as the chair. The back legs feature a metal insert in polished brass. Sofia can be completely upholstered in nonremovable elegant velvets, fine leather or nubuck. Sofia is available in both without and with armrests.
Unremovable covering.

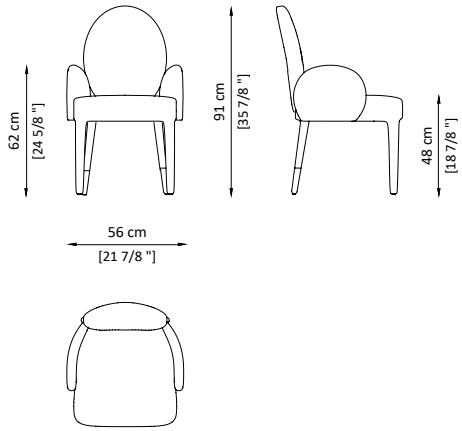

ECOLEATHER | SED.SOFI.710.ECO Polished gold feets Eco-Friendly Leather	2.270,00€
VELVET SUPERIOR | SED.SOFI.710.SUP Polished gold feets Velvet Superior	2.495,00€
LEATHER | SED.SOFI.710.PEL Polished gold feets Bovine Leather	2.950,00€
NABUK | SED.SOFI.710.NAB Polished gold feets Nabuk	3.390,00€

Audrey
Chair

DESIGN | PAOLO CASTELLI

Finishes of the above picture

Wood Painted
Matt Gold

Fabric Deluxe
Lampasso
Col. 12 Saffron

Le linee morbide e fluide sono i tratti distintivi della seduta Audrey, ideata per arredare con eleganza la zona dining offrendo al contempo un ottimo comfort. La seduta ha una struttura realizzata in legno di faggio con soffice imbottitura in poliuretano espanso sagomato a quote differenziate, con pre-rivestimento in cotone 100% e ovatta di poliestere. Il rivestimento è personalizzabile con eleganti tessuti, pelli bovine e nabuk, mentre le gambe sono in legno di faggio verniciato color oro opaco. Non sfoderabile.

Soft, fluid lines are the distinctive characteristics of this seat, designed to bring elegance to the dining area while offering maximum comfort at the same time. The chair has a beech wood structure, padded in different density expanded polyurethane, covered on the inside with 100% cotton and polyester. The upholstering can be personalized choosing elegant fabric, fine leather or nubuck; the legs are beech wood and are painted matt gold.
Unremovable covering.

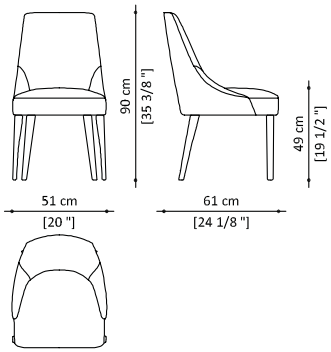

ECOLEATHER | SED.AUDR.720.ECO — 1.590,00€
Wooden legs matt gold painted
Eco-Friendly Leather

FABRIC SUPERIOR | SED.AUDR.720.SUP — 1.930,00€
Wooden legs matt gold painted
Fabric Superior

FABRIC DELUXE | SED.AUDR.720.DEL — 2.155,00€
Wooden legs matt gold painted
Fabric Deluxe

LEATHER | SED.AUDR.720.PEL — 2.385,00€
Wooden legs matt gold painted
Bovine Leather

NABUK | SED.AUDR.720.NAB — 2.610,00€
Wooden legs matt gold painted
Nabuk

Audrey

With arms

DESIGN | PAOLO CASTELLI

Finishes of the above picture

Wood Painted
Matt Gold

Fabric Deluxe
Lampasso
Col. 01 Stone

Le linee morbide e fluide sono i tratti distintivi della seduta Audrey, ideata per arredare con eleganza la zona dining offrendo al contempo un ottimo comfort. La seduta ha una struttura realizzata in legno di faggio con soffice imbottitura in poliuretano espanso sagomato a quote differenziate, con pre-rivestimento in cotone 100% e ovatta di poliestere. Il rivestimento è personalizzabile con eleganti tessuti, pelli bovine e nabuk, mentre le gambe sono in legno di faggio verniciato color oro opaco. Non sfoderabile.

Soft, fluid lines are the distinctive characteristics of this seat, designed to bring elegance to the dining area while offering maximum comfort at the same time. The chair has a beech wood structure, padded in different density expanded polyurethane, covered on the inside with 100% cotton and polyester. The upholstering can be personalized choosing elegant fabric, fine leather or nubuck; the legs are beech wood and are painted matt gold.
Unremovable covering.

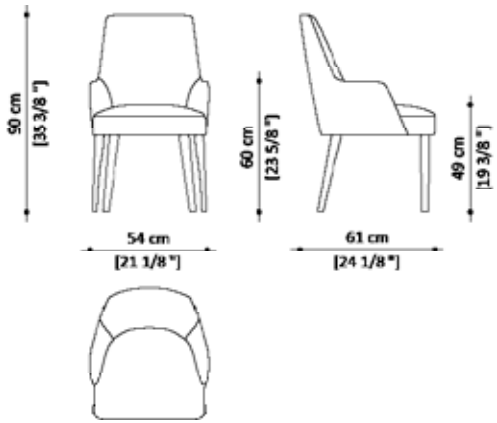

ECOLEATHER | SED.AUDR.710.ECO Wooden legs matt gold painted Eco-Friendly Leather	1.930,00€
FABRIC SUPERIOR | SED.AUDR.710.SUP Wooden legs matt gold painted Fabric Superior	2.045,00€
FABRIC DELUXE | SED.AUDR.710.DEL Wooden legs matt gold painted Fabric Deluxe	2.268,00€
LEATHER | SED.AUDR.710.PEL Wooden legs matt gold painted Bovine Leather	2.610,00€
NABUK | SED.AUDR.710.NAB Wooden legs matt gold painted Nabuk	2.835,00€

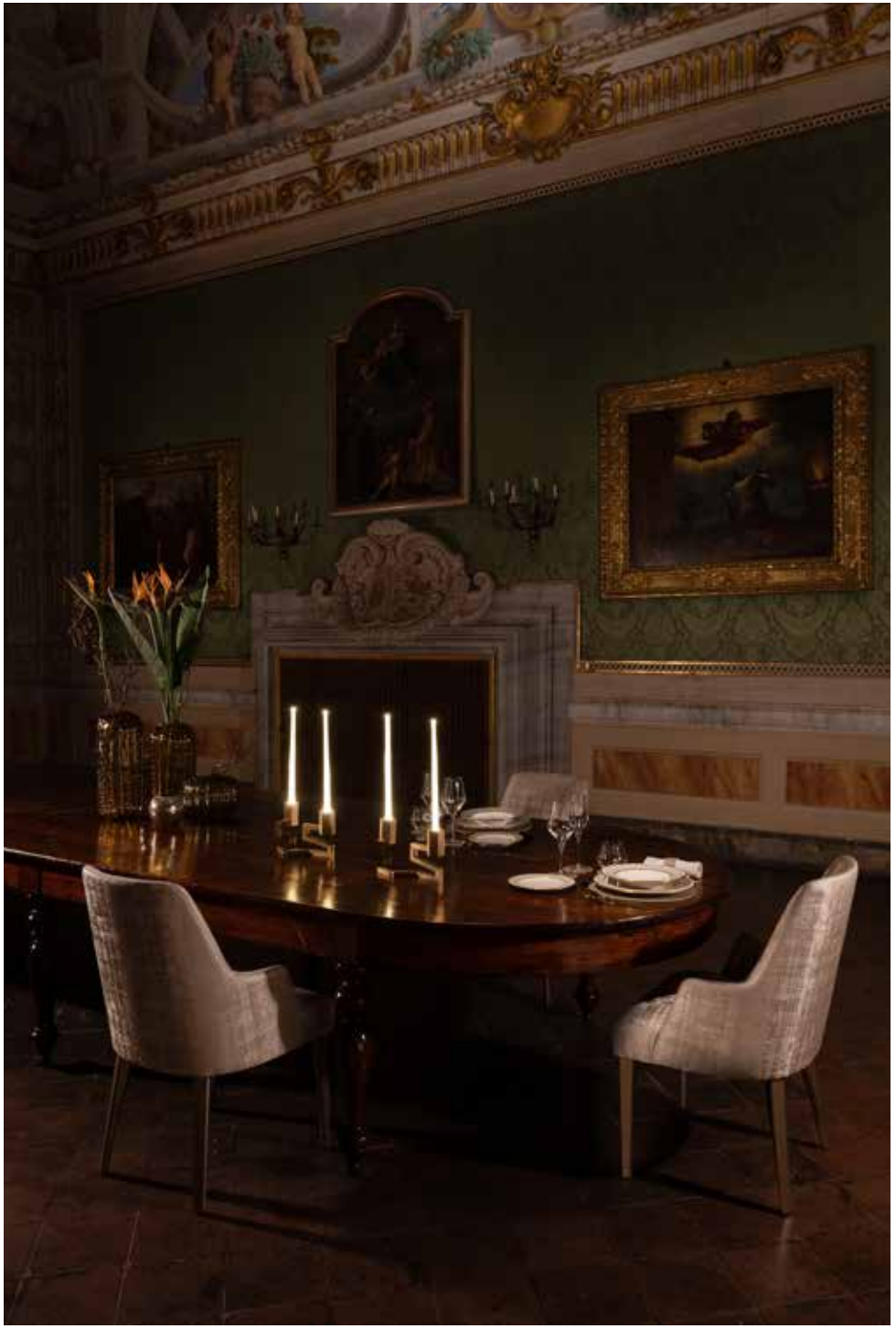

Echo
Chair

DESIGN | PAOLO CASTELLI

Finishes of the above picture

Wood
Dark Oak

Nabuck
Col. 34 Wine

Sedia di impianto classico e di comode proporzioni, le cui forme fluide invitano a piacevoli conversazioni. Struttura in multistrato curvato con gambe rastremate in legno di rovere tinto scuro, imbottitura in poliuretano espanso sagomato a quote differenziate. Lo schienale imbottito trapuntato con motivo ad archi richiama le suggestioni prospettiche dei portici bolognesi. Rivestimento disponibile in pregiati tessuti, pelli bovine e nabuk. Non sfoderabile.

Classical, comfortably sized chair with fluid shapes that just invite pleasant conversations. Curved plywood frame with tapered legs in dark stained oak, padded in different density expanded polyurethane. The backrest, padded with arches pattern, brings to mind the intriguing perspective of the porticoes of Bologna. Covers are available in elegant fabric, fine leathers or nabuk. Unremovable covering.

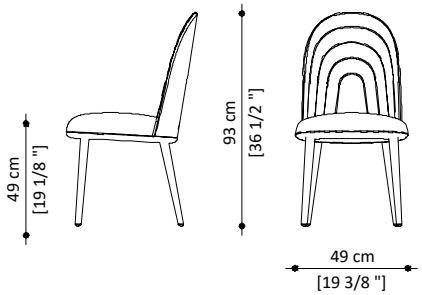

ECOLEATHER | SED.ECHO.700.ECO Base in oak finish Eco-Friendly Leather	1.700,00€
FABRIC SUPERIOR | SED.ECHO.700.SUP Base in oak finish Fabric Superior	2.045,00€
FABRIC DELUXE | SED.ECHO.700.DEL Base in oak finish Fabric Deluxe	2.155,00€
LEATHER | SED.ECHO.700.PEL Base in oak finish Bovine Leather	2.268,00€
NABUK | SED.ECHO.700.NAB Base in oak finish Nabuk	2.390,00€

◄ Schienale imbottito a fasce ondulate.

Back padded with wavy bands.

Strapuntino
Chair

DESIGN | PAOLO CASTELLI

Finishes of the above picture

Wood
Painted
Black

Nabuk twisted
Col. 15 Taupe

Matt
Brass

Questa sedia riassume in sé l'essenza del design contemporaneo e la memoria della tradizione. Telaio, essenziale nel disegno ma raffinato nelle proporzioni, in faggio laccato nero opaco con preziosi dettagli in ottone satinato opaco, che garantiscono il fascino a questa seduta estremamente versatile. Imbottitura in poliuretano espanso sagomato a quote differenziate. Rivestimento disponibile in pregiati tessuti, pelli bovine e nabuk. Non sfoderabile.

This chair embodies the very essence of contemporary design and the memory of tradition. The frame, simple in its design but refined in its proportions, is in matt black lacquered beech with fine details in matt satin finish brass, which guarantee the charm of this extremely versatile seat. Padding in different density expanded polyurethane. Covers are available in elegant fabric, fine leathers or nabuk. Unremovable covering.

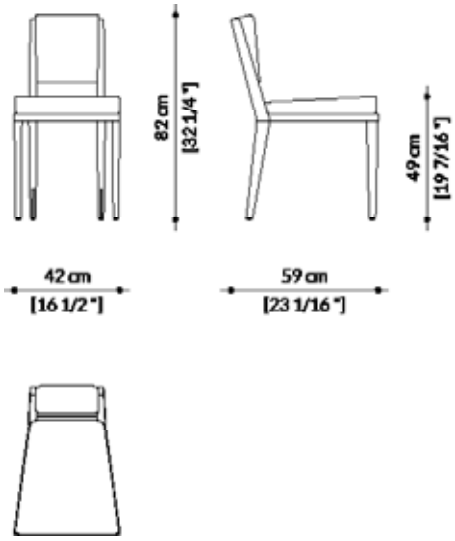

ECOLEATHER | SED.TRAI.700.ECO — 1.800,00€
Base mat black lacquered bleech
Eco-Friendly Leather

FABRIC SUPERIOR | SED.TRAI.700.SUP — 1.980,00€
Base mat black lacquered bleech
Fabric Superior

FABRIC DELUXE | SED.TRAI.700.DEL — 2.100,00€
Base mat black lacquered bleech
Fabric Deluxe

LEATHER | SED.TRAI.700.PEL — 2.250,00€
Base mat black lacquered bleech
Bovine Leather

NABUK | SED.TRAI.700.NAB — 2.400,00€
Base mat black lacquered bleech
Nabuk

◄ Seduta compatta e dalle raffinate e insolite proporzioni.

Solid seat characterised by refined and peculiar proportions.

N°5
Low Chair

DESIGN | PAOLO CASTELLI

Finishes of the above picture

Wood
Dark Oak

Nabuk
Col. 15 Taupe

Matt
Brass

Linee avvolgenti e fluide per questa collezione di sedute imbottite dal grande comfort e dalla massima raffinatezza. Disponibile in due versioni: con seduta a pozzetto e con schienale alto.
LOW CHAIR: gambe in rovere tinto scuro, seduta a pozzetto con sedile e schienale imbottiti in poliuretano espanso sagomato a quote differenziate e rivestita in tessuto o pelle a campionario. Non sfoderabile.

Enveloping and fluid lines for this collection of highly comfortable upholstered chairs of optimal refinement. Available in two versions: with low and high back.
LOW CHAIR: dark stained oak legs, padded seat and back in different density expanded polyurethane, upholstered in fabric or sample leather. Not removable.

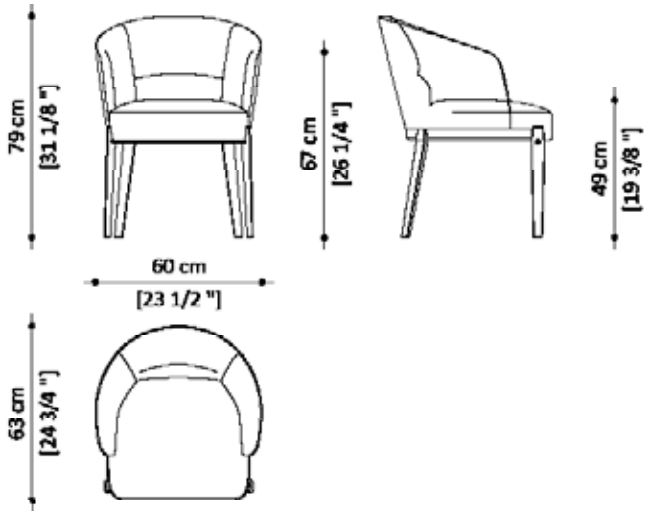

FABRIC SUPERIOR | SED.NUM5.710.SUP Front & back fabric Superior	4.195,00€
FABRIC DELUXE | SED.NUM5.710.DEL Front & back fabric Deluxe	4.430,00€
LEATHER | SED.NUM5.710.PEL Front & back bovine leather	4.650,00€
NABUK | SED.NUM5.710.NAB Front & back nabuk	4.770,00€

◄ Confort e versatilità di utilizzo soprattutto in ambito contract.

Ideal in contract commissions for his comfort and versatility.

N°5
High Chair

DESIGN | PAOLO CASTELLI

Finishes of the above picture

Wood
Dark Oak

Nabuk
Col. 15 Taupe

Matt
Brass

Linee avvolgenti e fluide per questa collezione di sedute imbottite dal grande comfort e dalla massima raffinatezza. Disponibile in due versioni: con seduta a pozzetto e con schienale alto.
HIGH CHAIR: struttura in rovere tinto scuro, seduta schienale in legno di rovere tinto scuro, seduta imbottita in poliuretano espanso sagomato a quote differenziate e rivestita in tessuto o pelle a campionario. Impreziosisce il disegno un pregiata maniglia decorativa in pelle e ottone opaco, posizionata sul retro dello schienale. Non sfoderabile.

Enveloping and fluid lines for this collection of highly comfortable upholstered chairs of optimal refinement. Available in two versions: with low and high back.
HIGH CHAIR: dark stained oak structure, dark-stained oak backrest seat, padded seat and back in different density expanded polyurethane, upholstered in fabric or sample leather. The design is enhanced by a high-quality decorative handle in opaque brass and leather positioned on the back of the back. Not removable.

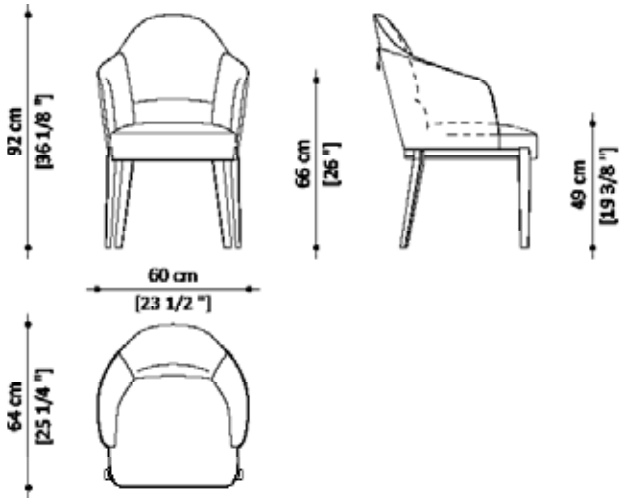

FABRIC SUPERIOR | SED.NUM5.720.SUP — 4.425,00€
Front in fabric Superior and back in oak wood

FABRIC DELUXE | SED.NUM5.720.DEL — 4.650,00€
Front in fabric Deluxe and back in oak wood

LEATHER | SED.NUM5.720.PEL — 4.880,00€
Front in bovine leather and back in oak wood

NABUK | SED.NUM5.720.NAB — 5.100,00€
Front nabuk and back in oak wood

U
Chair

DESIGN | VITTORIO PARADISO

archiproducts DESIGN SELECTION 2021

Finishes of the above picture

Metal Black Matt varnished

Leather Col. Black

Alternative seat finishes

Leather Col. Dark Brown

Leather Col. Natural

Alternative frame finishes

Leather Col. Sand

Metal Finish Matt Bronzed Brass

Raffinata seduta la cui forma invitante è definita da una profondità accentuata e da un fronte leggermente inclinato. La struttura, che avvolge elegantemente il corpo, è disponibile in finitura nero verniciato opaco oppure bronzo ottone opaco, con rivestimento in cuoio. La seduta appare come sospesa, fluttuante, poiché semplicemente calzata nello schienale e infilata nei braccioli.

A refined chair with alluring shape outlined by an accentuated depth and a slightly tilted front.
The structure elegantly embraces the body and comes in matt black varnished metal or matt bronzed brass, with leather upholstery featuring visible stitching.
The seat fits simply into the backrest and slots into the armrests, making it look almost as though it is suspended, floating.

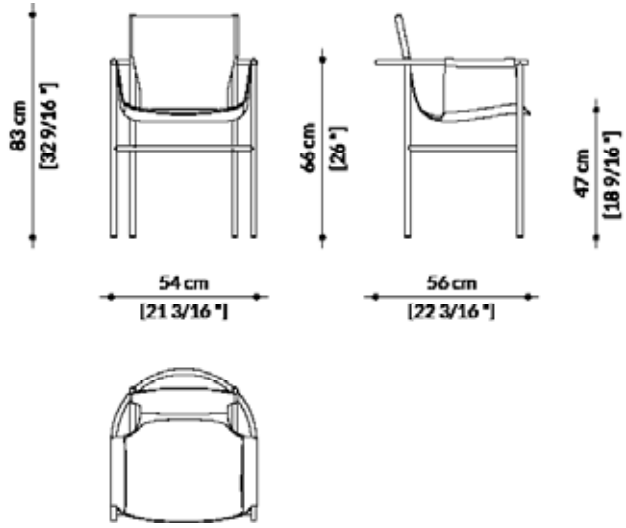

MATT BLACK FINISH | SED.UCHA.800.PEL 1.380,00€
Metal frame matt black finish
Seat and back made in leather. Available colors: Black, Natural, Sand, Dark Brown

MATT BRONZED BRASS | SED.UCHA.810.PEL 1.850,00€
Metal frame matt bronzed brass finish
Seat and back made in leather. Available colors: Black, Natural, Sand, Dark Brown

Empire
Chair

DESIGN | PAOLO CASTELLI

Finishes of the above picture

Wood
Dark Oak

Leather
Col. Dark Brown

Metal Finish
Matt Gold

Una sedia polimaterica che profuma di viaggi esotici alla ricerca di un Eden perduto. Ispirata allo stile coloniale lo schienale e la seduta sono rivestiti in cuoio, mentre la ricercatezza della lavorazione della struttura in rovere tinto scuro è esalta dal contrasto cromatico e materico dei preziosi inserti in metallo con finitura oro opaco.

A multi-materic chair with the scent of exotic voyages in search of a lost Eden. Inspired by the colonial style, the back and seat are covered in leather, whereas the refinement of the working of the structure in dark stained oak is highlighted by the chromatic and materic contrast of precious inserts in metal mat gold finish.

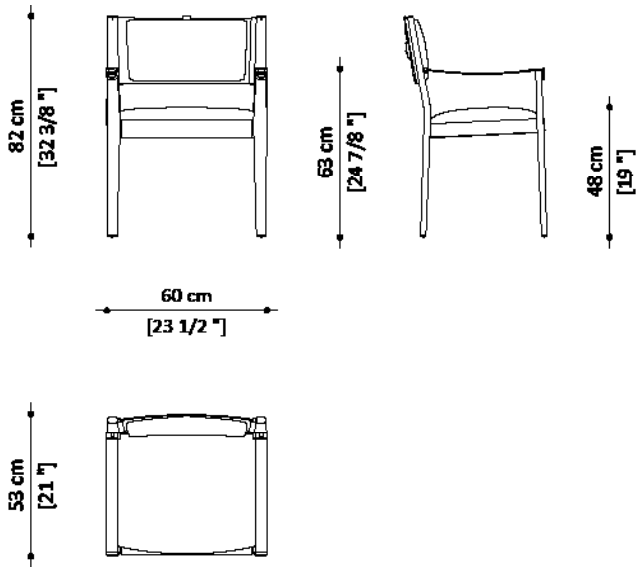

EMPIRE | SED.EMPI.710.PEL 4.900,00€
Wooden structure dark stained oak, emery leather, metal details in mat gold finish

◄ Ispirazione coloniale e preziosi dettagli dorati.

Colonial inspiration with precious golden details.

Ginevra
Chair

DESIGN | GIAMPIERO PEIA

Finishes of the above picture

Metal Finish
Chrome

Bovine Leather
Col. 669 Cuoio

Poltroncina elegante ed accogliente su base girevole, Ginevra è un tocco di classe per il soggiorno e perfetta abbinata a tavoli da pranzo e da riunione.
La seduta ha una base girevole in acciaio inox cromato ed una scocca in legno multistrato curvato imbottita in poliuretano espanso sagomato a quote differenziate con pre-rivestimento in cotone 100% e ovatta di poliestere. Il rivestimento è in ecopelle o pelle bovina pieno fiore, non sfoderabile.

An elegant and light swivel chair, Ginevra brings a touch of class to the living room and is perfect around a dinner or a meeting table.
It has a stainless steel swayable base and a curved multi-layer wood structure, padded with molded different density expanded polyurethane with an inside cover made of 100% cotton and polyester.
The Ginevra chair can be upholstered in fine leather or ecoleather, non-removable.

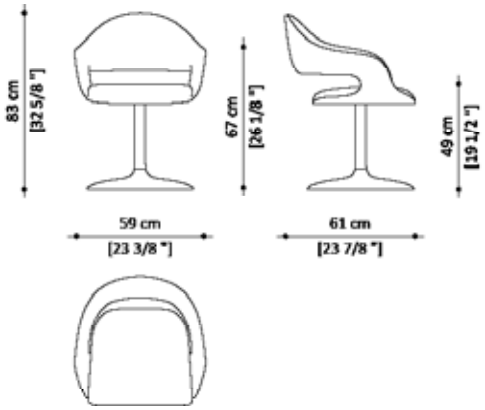

ECOLEATHER | SED.GINE.700.ECO — 2.495,00€
Chromed base
Eco-Friendly Leather

LEATHER | SED.GINE.700.PEL — 2.950,00€
Chromed base
Bovine Leather

NABUK | SED.GINE.700.NAB — 3.180,00€
Chromed base
Nabuk

Venice
Stool

DESIGN | PAOLO CASTELLI

Finishes of the above picture

Wood Painted Black

Metal Finish Black Nichel Matt

Metal Finish Polished Brass (footrest)

Bovine Leather Col. 603 Light Grey

Elegante e versatile sgabello, adatto per cocktail bar e per ambienti domestici.
Ha una struttura interna in multistrato di legno curvato con imbottitura in poliuretano a densità variabile. Rivestimento non sfoderabile personalizzabile con pregiati tessuti, raffinate pelli bovine pieno fiore e nabuk. La seduta poggia su una struttura in legno di faggio verniciato nero opaco con poggiapiedi in metallo finitura nichel nero con frontale in ottone lucido.

Stool with enveloping lines and high-backed which expands the Venice collection.
Suitable for the living room as for the night zone, is characterized by an internal structure in curved wood with padding in variable-density polyurethane-finishing. It has a non-removable cover customizable with fine fabrics, fine full-grain leather and nabuk finishing.
The seat rests on a bleach wooden frame mat black lacquered, footrest in metal - nichel finish with polished brass insert.

STOOL H85

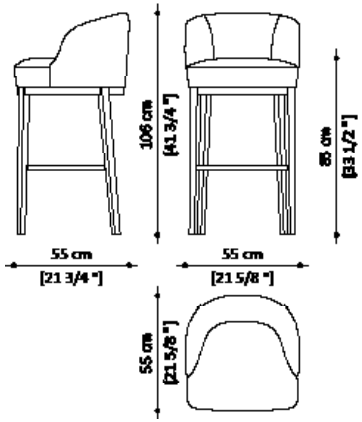

STOOL H72

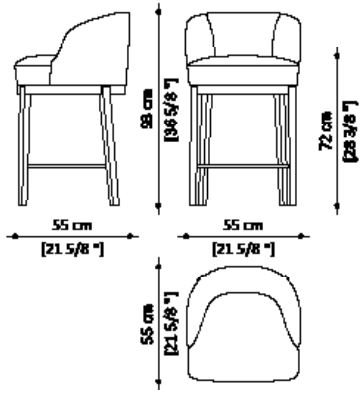

STOOL H72 / H85
ECOLEATHER | SED.VENI.810.ECO / SED.VENI.800.ECO — 2.390,00€
Black mat varnished legs
Eco-Friendly Leather

FABRIC SUPERIOR | SED.VENI.810.SUP / SED.VENI.800.SUP — 2.610,00€
Black mat varnished legs
Fabric Deluxe

FABRIC DELUXE | SED.VENI.810.DEL / SED.VENI.800.DEL — 2.725,00€
Black mat varnished legs
Fabric Deluxe

LEATHER | SED.VENI.810.PEL / SED.VENI.800.PEL — 2.950,00€
Black mat varnished legs
Leather

NABUK | SED.VENI.810.NAB / SED.VENI.800.NAB — 3.065,00€
Black mat varnished legs
Nabuk

Inspiration

Fine furniture and lighting

PAOLO CASTELLI

Divani & poltrone
Sofas & armchairs

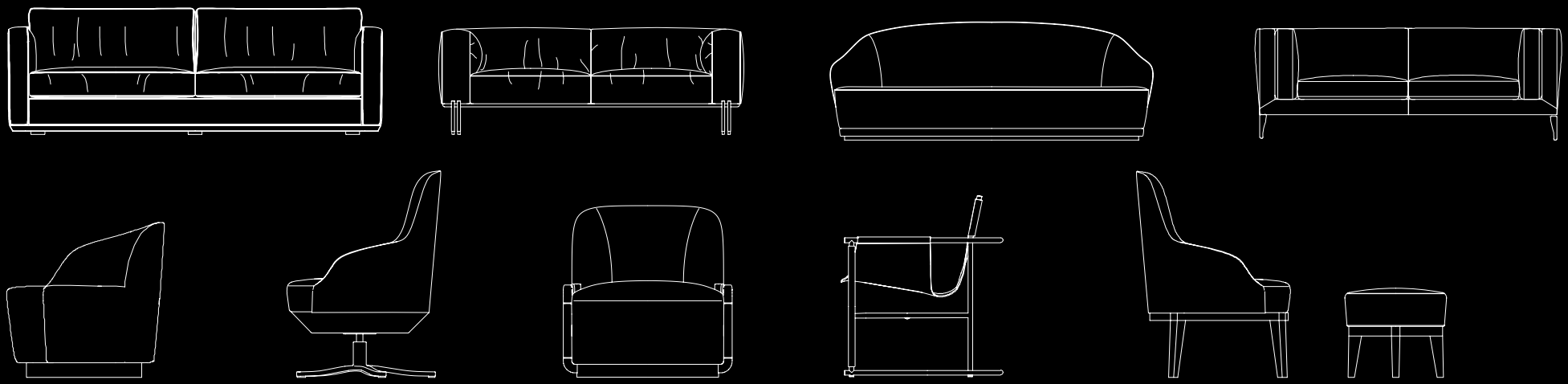

Lemma

Sofa

DESIGN | PAOLO CASTELLI

Finishes of the above picture

Fabric Superior
Velvet Sig
Col. 29 Beige

Lemma Sofa ha struttura in legno con sistema di molleggio a cinghie elastiche imbottito con poliuretano espanso sagomato a quote differenziate. È provvisto di zoccolo in legno rivestito con il medesimo rivestimento. Il rivestimento, non sfoderabile, può essere personalizzato con morbidi velluti e cuscini decorativi. Il rivestimento è realizzato con piping in tinta che impreziosisce ed esalta la linea del divano.

Its wooden structure features a suspension system of elastic bands, with different density expanded polyurethane stuffing. Its base is made of wood covered with the same materials. The non-removable cover can be personalised with soft velvet fabric and decorative cushions. The upholstery is made with matching piping that embellishes and enhances the sofa line.

LEMMA SX - also available dx model

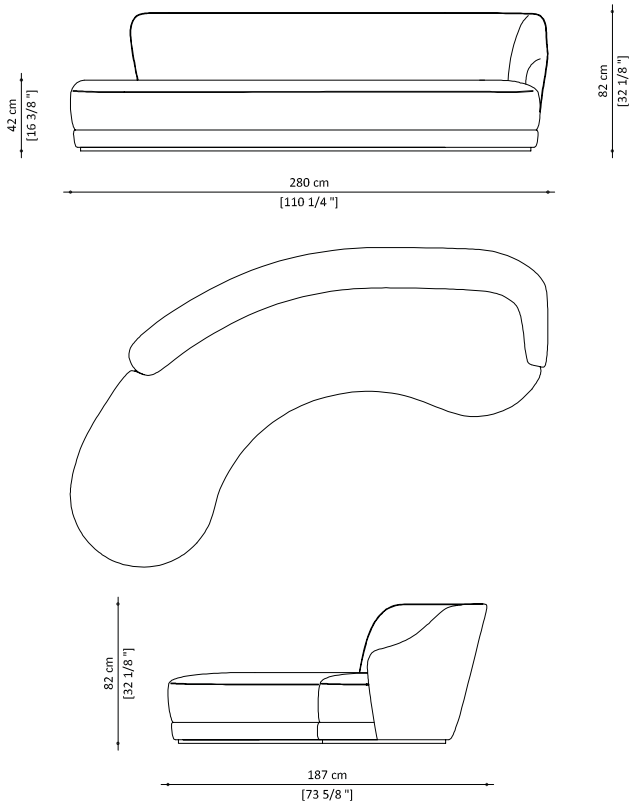

SX / DX

VELVET SUPERIOR | SED.LEMM.110.SUP / SED.LEMM.120.SUP Fabric Velvet Superior	10.773,00€
VELVET DELUXE | SED.LEMM.110.DEL / SED.LEMM.120.DEL Fabric Velvet Deluxe	11.907,00€
NABUK | SED.LEMM.110.NAB / SED.LEMM.120.NAB	14.175,00€

◄ Lo sviluppo delle proporzioni è definito dall'applicazione della sezione aurea.

Golden ratio develops the proportions of this sofa.

Lemma
Simmetric

DESIGN | PAOLO CASTELLI

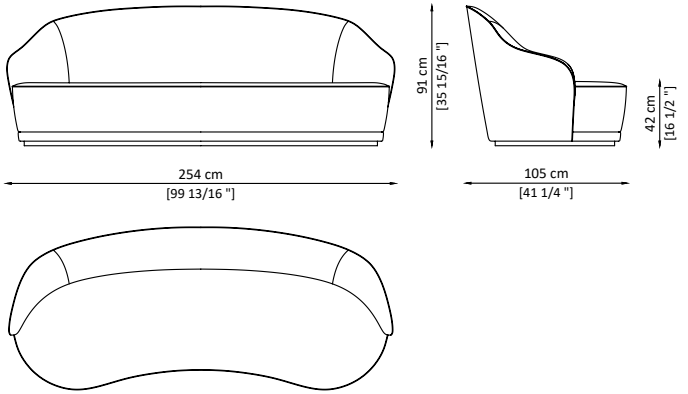

VELVET SUPERIOR | SED.LEMM.100.SUP — 10.773,00€
Fabric Velvet Superior

VELVET DELUXE | SED.LEMM.100.DEL — 11.907,00€
Fabric Velvet Deluxe

NABUK | SED.LEMM.100.NAB — 14.175,00€
Nabuk

Finishes of the above picture

Fabric Superior
Velvet Sig
Col. 29 Beige

Lemma Simmetric ha struttura in legno con sistema di molleggio a cinghie elastiche imbottito con poliuretano espanso sagomato a quote differenziate. È provvisto di zoccolo in legno rivestito con il medesimo rivestimento. Il rivestimento, non sfoderabile, può essere personalizzato con morbidi velluti e cuscini decorativi. Possibilità di rivestire lo schienale a contrasto. Il rivestimento è realizzato con piping in tinta che impreziosisce ed esalta la linea del divano.

Its wooden structure features a suspension system of elastic bands, with different density expanded polyurethane stuffing. Its base is made of wood covered with the same materials. The non-removable cover can be personalised with soft velvet fabric and decorative cushions. The back can be upholstered in a contrasting colour even with decorative fabrics. The upholstery is made with matching piping that embellishes and enhances the sofa line.

Inspiration
Fine furniture and lighting

Mambo
Sofa

DESIGN | MASSIMO IOSA GHINI

Finishes of the above picture

Nabuk
Col. 15 Taupe

Eleganza, cura del dettaglio e comfort sono le principali caratteristiche del divano Mambo Capitonné, realizzato con elegante manifattura, ideale da centro stanza.
Presenta un telaio interno realizzato in legno multistrato e imbottito in poliuretano espanso a densità differenziate e fibra di poliestere. La preziosa manifattura del decoro realizzato a mano è ideale con rivestimento in pelle bovina pieno fiore o morbido nabuk.
Non sfoderabile.

Elegance, attention to detail and comfort are the main characteristics of the Mambo Capitonné , with elegant upholstering, ideal at the center of the room.
Its multi-layer wood structure is padded with different density expanded polyurethane and polyester fibre.
The precious handcrafted manufacturing of the decor is ideal with the fine leather or soft nubuck finish.
Unremovable covering.

SOFA

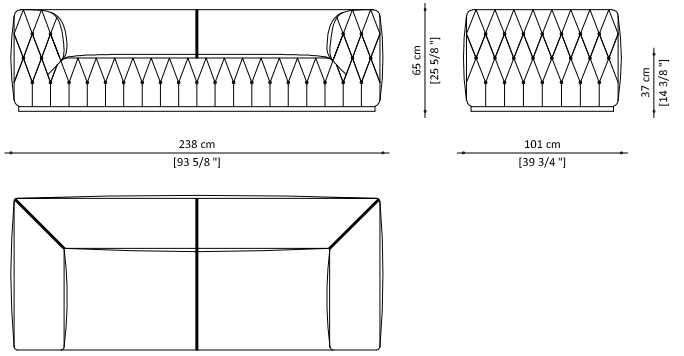

FABRIC SUPERIOR | SED.MAMB.120.SUP
Fabric Superior — 8.700,00€

LEATHER | SED.MAMB.120.PEL
Bovine Leather — 10.500,00€

NABUK | SED.MAMB.120.NAB
Nabuk — 12.500,00€

POUF 50

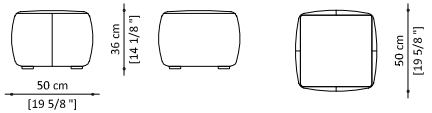

FABRIC SUPERIOR | SED.MAMB.510.SUP
Velvet Sig Superior — 1.700,00€

LEATHER | SED.MAMB.510.PEL
Bovine Leather — 1.900,00€

NABUK | SED.MAMB.510.NAB
Nabuk — 2.300,00€

POUF 80

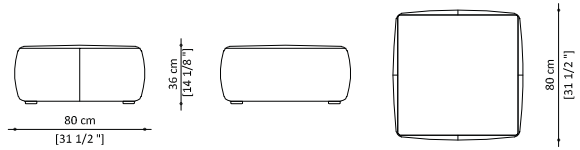

POUF 80
FABRIC SUPERIOR | SED.MAMB.520.SUP
Velvet Sig Superior — 1.900,00€

LEATHER | SED.MAMB.520.PEL
Bovine Leather — 2.200,00€

NABUK | SED.MAMB.520.NAB
Nabuk — 2.500,00€

◄ Pregiata lavorazione capitonné su tutti i lati del divano.

Refined quilted handmaking.

Soft Ratio
Sofa

DESIGN | PAOLO CASTELLI

Finishes of the above picture

Metal Finish Matt Bronzed Brass

Metal Black Matt varnished

Bovine Leather Col. 603 Dove Grey

Available back and side options

Bovine Leather Col. 634 Oasi

Bovine Leather Col. 669 Cuoio

Bovine Leather Col. 602 Dark Brown

La linea Soft Ratio è un sistema di sedute componibili a 11 elementi lineari, ad angolo o a penisola che si abbinano tra loro per dare luogo a molteplici combinazioni. La base in metallo finitura nero opaco con doppi piedini in metallo finitura bronzo ottone opaco, evidenzia la leggerezza complessiva del progetto, mentre la scocca esterna in pelle con cuciture in tinta e a contrasto nel bracciolo, e l'abbondante seduta sono il frutto di una costante ricerca nel mondo del living contemporaneo. Cuscinatura sedile e schienale non sfoderabile, realizzata in poliuretano espanso sagomato a quote differenziate. Nel modulo chaise longue con tavolino integrato il piano è realizzato in pietra Pece o rivestito in pelle.

The Soft Ratio range is a modular seating system consisting of 11 straight, corner or peninsula elements which can be mixed and matched to create multiple combinations. The metal base matt black finish with double metal feet matt bronzed brass finish highlights the overall lightness of the design, while the leather backrest, with matching or contrasting visible stitching (even on the armrests), and the generous seat are the result of constant research into the world of contemporary living. Seat and backrest cushion are padded in different density expanded polyurethane, covers are not removable. The chaise longue element with fixed coffee table is provided with Pietra Pece top or leather covered.

210

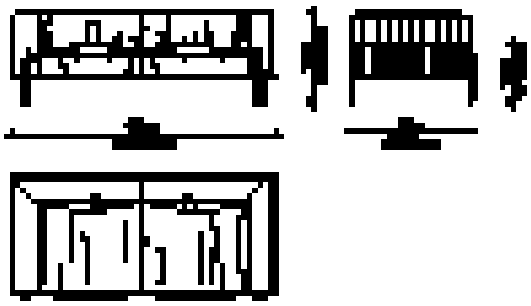

FABRIC SUPERIOR | SED.SOFT.110.SUP 7.950,00€
Metal base matt black finish with double metal feet matt bronzed brass finish
Leather back and side covering - Upholstering Fabric Superior

FABRIC DELUXE | SED.SOFT.110.DEL 8.600,00€
Metal base matt black finish with double metal feet matt bronzed brass finish
Leather back and side covering - Upholstering Fabric Deluxe

LEATHER | SED.SOFT.110.PEL 9.200,00€
Metal base matt black finish with double metal feet matt bronzed brass finish
Leather back and side covering - Upholstering Bovine Leather

NABUK | SED.SOFT.110.NAB 9.900,00€
Metal base matt black finish with double metal feet matt bronzed brass finish
Leather back and side covering - Upholstering Nabuk

250

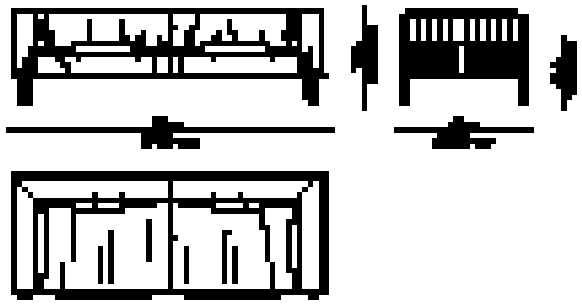

FABRIC SUPERIOR | SED.SOFT.120.SUP 9.100,00€
Metal base matt black finish with double metal feet matt bronzed brass finish
Leather back and side covering - Upholstering Fabric Superior

FABRIC DELUXE | SED.SOFT.120.DEL 9.990,00€
Metal base matt black finish with double metal feet matt bronzed brass finish
Leather back and side covering - Upholstering Fabric Deluxe

LEATHER | SED.SOFT.120.PEL 10.700,00€
Metal base matt black finish with double metal feet matt bronzed brass finish
Leather back and side covering - Upholstering Bovine Leather

NABUK | SED.SOFT.120.NAB 11.900,00€
Metal base matt black finish with double metal feet matt bronzed brass finish
Leather back and side covering - Upholstering Nabuk

Soft Ratio

Composition M

DESIGN | PAOLO CASTELLI

CENTRAL 170

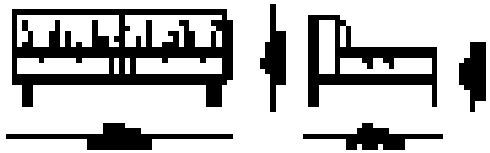

FABRIC SUPERIOR | SED.SOFT.131.SUP 6.200,00€
Metal base matt black finish with double metal feet matt bronzed brass finish
Leather back and side covering - Upholstering Fabric Superior

FABRIC DELUXE | SED.SOFT.131.DEL 6.700,00€
Metal base matt black finish with double metal feet matt bronzed brass finish
Leather back and side covering - Upholstering Fabric Deluxe

LEATHER | SED.SOFT.131.PEL 7.200,00€
Metal base matt black finish with double metal feet matt bronzed brass finish
Leather back and side covering - Upholstering Bovine Leather

NABUK | SED.SOFT.131.NAB 7.900,00€
Metal base matt black finish with double metal feet matt bronzed brass finish
Leather back and side covering - Upholstering Nabuk

CENTRAL 170 LEFT BACK also available right model

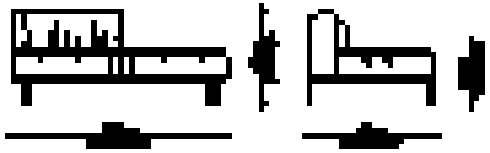

FABRIC SUPERIOR | SED.SOFT.132.SUP 5.900,00€
Metal base matt black finish with double metal feet matt bronzed brass finish
Leather back and side covering - Upholstering Fabric Superior

FABRIC DELUXE | SED.SOFT.132.DEL 6.500,00€
Metal base matt black finish with double metal feet matt bronzed brass finish
Leather back and side covering - Upholstering Fabric Deluxe

LEATHER | SED.SOFT.132.PEL 6.700,00€
Metal base matt black finish with double metal feet matt bronzed brass finish
Leather back and side covering - Upholstering Bovine Leather

NABUK | SED.SOFT.132.NAB 7.300,00€
Metal base matt black finish with double metal feet matt bronzed brass finish
Leather back and side covering - Upholstering Nabuk

TERMINAL 190 LEFT also available right model

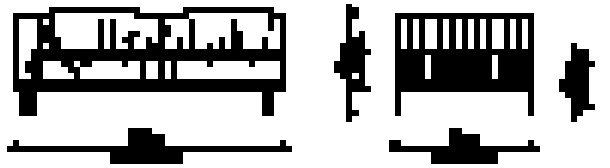

FABRIC SUPERIOR | SED.SOFT.133.SUP 7.200,00€
Metal base matt black finish with double metal feet matt bronzed brass finish
Leather back and side covering - Upholstering Fabric Superior

FABRIC DELUXE | SED.SOFT.133.DEL 7.800,00€
Metal base matt black finish with double metal feet matt bronzed brass finish
Leather back and side covering - Upholstering Fabric Deluxe

LEATHER | SED.SOFT.133.PEL 8.200,00€
Metal base matt black finish with double metal feet matt bronzed brass finish
Leather back and side covering - Upholstering Bovine Leather

NABUK | SED.SOFT.133.NAB 9.000,00€
Metal base matt black finish with double metal feet matt bronzed brass finish
Leather back and side covering - Upholstering Nabuk

CHAISE LONGUE 190 LEFT model also available right

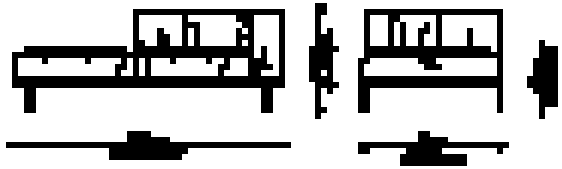

FABRIC SUPERIOR | SED.SOFT.334.SUP 6.400,00€
Metal base matt black finish with double metal feet matt bronzed brass finish
Leather back and side covering - Upholstering Fabric Superior

FABRIC DELUXE | SED.SOFT.334.DEL 7.100,00€
Metal base matt black finish with double metal feet matt bronzed brass finish
Leather back and side covering - Upholstering Fabric Deluxe

LEATHER | SED.SOFT.334.PEL 7.800,00€
Metal base matt black finish with double metal feet matt bronzed brass finish
Leather back and side covering - Upholstering Bovine Leather

NABUK | SED.SOFT.334.NAB 8.300,00€
Metal base matt black finish with double metal feet matt bronzed brass finish
Leather back and side covering - Upholstering Nabuk

OPTIONAL BACK SUPPORT - 60 x 60 cm (round element Ø12 x 45cm)

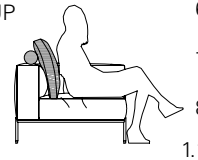

FABRIC SUPERIOR | COM.SOFT.CUS.SUP 650,00€

FABRIC DELUXE | COM.SOFT.CUS.DEL 750,00€

LEATHER | COM.SOFT.CUS.PEL 870,00€

NABUK | COM.SOFT.CUS.NAB 1.100,00€

Soft Ratio

Composition L

DESIGN | PAOLO CASTELLI

CENTRAL 210

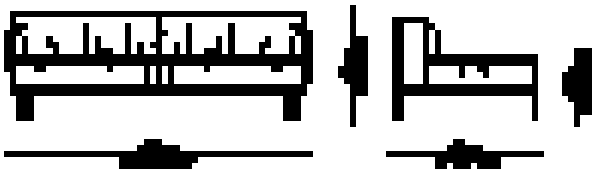

FABRIC SUPERIOR | SED.SOFT.141.SUP 6.500,00€
Metal base matt black finish with double metal feet matt bronzed brass finish
Leather back and side covering - Upholstering Fabric Superior

IC DELUXE | SED.SOFT.141.DEL 7.400,00€
base matt black finish with double metal feet matt bronzed brass finish
r back and side covering - Upholstering Fabric Deluxe

HER | SED.SOFT.141.PEL 7.900,00€
base matt black finish with double metal feet matt bronzed brass finish
r back and side covering - Upholstering Bovine Leather

NABUK | SED.SOFT.141.NAB 8.900,00€
Metal base matt black finish with double metal feet matt bronzed brass finish
Leather back and side covering - Upholstering Nabuk

CENTRAL 210 LEFT BACK also available right model

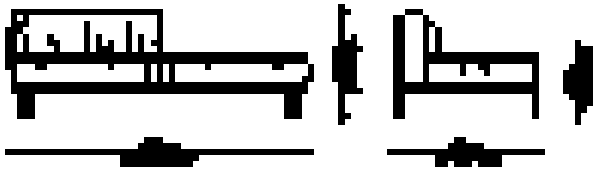

FABRIC SUPERIOR | SED.SOFT.142.SUP 6.150,00€
Metal base matt black finish with double metal feet matt bronzed brass finish
Leather back and side covering - Upholstering Fabric Superior

FABRIC DELUXE | SED.SOFT.142.DEL 6.950,00€
Metal base matt black finish with double metal feet matt bronzed brass finish
Leather back and side covering - Upholstering Fabric Deluxe

LEATHER | SED.SOFT.142.PEL 7.150,00€
Metal base matt black finish with double metal feet matt bronzed brass finish
Leather back and side covering - Upholstering Bovine Leather

NABUK | SED.SOFT.142.NAB 7.750,00€
Metal base matt black finish with double metal feet matt bronzed brass finish
Leather back and side covering - Upholstering Nabuk

TERMINAL 230 LEFT also available right model

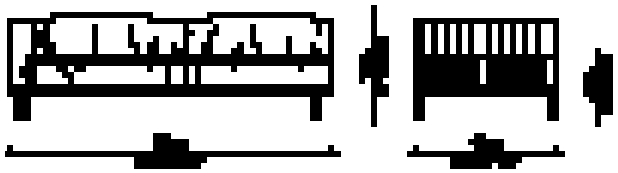

FABRIC SUPERIOR | SED.SOFT.143.SUP 7.900,00€
Metal base matt black finish with double metal feet matt bronzed brass finish
Leather back and side covering - Upholstering Fabric Superior

FABRIC DELUXE | SED.SOFT.143.DEL 8.700,00€
Metal base matt black finish with double metal feet matt bronzed brass finish
Leather back and side covering - Upholstering Fabric Deluxe

LEATHER | SED.SOFT.143.PEL 9.000,00€
Metal base matt black finish with double metal feet matt bronzed brass finish
Leather back and side covering - Upholstering Bovine Leather

NABUK | SED.SOFT.143.NAB 10.100,00€
Metal base matt black finish with double metal feet matt bronzed brass finish
Leather back and side covering - Upholstering Nabuk

CHAISE LONGUE 230 LEFT also available right model

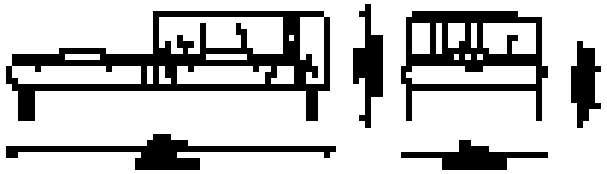

FABRIC SUPERIOR | SED.SOFT.344.SUP 7.500,00€
Metal base matt black finish with double metal feet matt bronzed brass finish
Leather back and side covering - Upholstering Fabric Superior

FABRIC DELUXE | SED.SOFT.344.DEL 8.300,00€
Metal base matt black finish with double metal feet matt bronzed brass finish
Leather back and side covering - Upholstering Fabric Deluxe

LEATHER | SED.SOFT.344.PEL 8.800,00€
Metal base matt black finish with double metal feet matt bronzed brass finish
Leather back and side covering - Upholstering Bovine Leather

NABUK | SED.SOFT.344.NAB 9.700,00€
Metal base matt black finish with double metal feet matt bronzed brass finish
Leather back and side covering - Upholstering Nabuk

CHAISE LONGUE 230 LEFT WITH TABLE (for composition M and L) also available right model

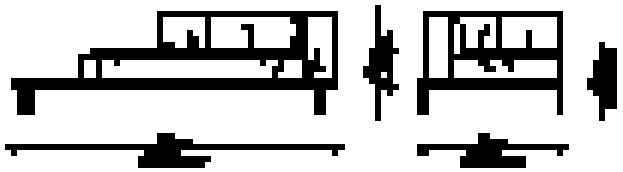

FABRIC SUPERIOR | SED.SOFT.345.SUP 7.830,00€
Metal base matt black finish with double metal feet matt bronzed brass finish
Leather back and side covering - Upholstering Fabric Superior

FABRIC DELUXE | SED.SOFT.345.DEL 8.250,00€
Metal base matt black finish with double metal feet matt bronzed brass finish
Leather back and side covering - Upholstering Fabric Deluxe

LEATHER | SED.SOFT.345.PEL 9.200,00€
Metal base matt black finish with double metal feet matt bronzed brass finish
Leather back and side covering - Upholstering Bovine Leather

NABUK | SED.SOFT.345.NAB 10.200,00€
Metal base matt black finish with double metal feet matt bronzed brass finish
Leather back and side covering - Upholstering Nabuk

Dromo Club
Sofa

DESIGN | VITTORIO PARADISO

Finishes of the above picture

Nabuck
Col. 15
Taupe

Dark
Stained Oak

Dromo Club è una declinazione della linea Dromo, nata come omaggio al grande maestro Carlo Scarpa e alla sua città. Lo sviluppo del basamento fino a terra rafforza l'invito alla seduta e al relax, trasformandone la silhouette elegante in una proposta dal forte impatto geometrico, capace di interpretare il ruolo di protagonista in ogni ambiente. Cuscinatura sedile e schienale sfoderabile, imbottitura in poliuretano espanso sagomato a quote differenziate e piuma d'oca. Il rivestimento è in pelle, nabuk o tessuto con piping in tessuto col. marrone (Ref. Fabric Sateen D6037815 Brown) o in tinta.

Dromo Club is a development of the Dromo line, conceived as a tribute to the great artist Carlo Scarpa and his home town. The extension of the base to the floor emphasises the invitation to sit down and relax, transforming the elegant silhouette into a proposal with a strong geometric impact, capable of playing the leading role in any setting. Removable seat and backrest cushion covers, padding in different density expanded polyurethane added with feather padding. Upholstered in leather, nubuck or fabric with piping in brown fabric (Ref. Fabric Sateen D6037815 Brown) or in the same colour as the upholstery.

3 SEATS

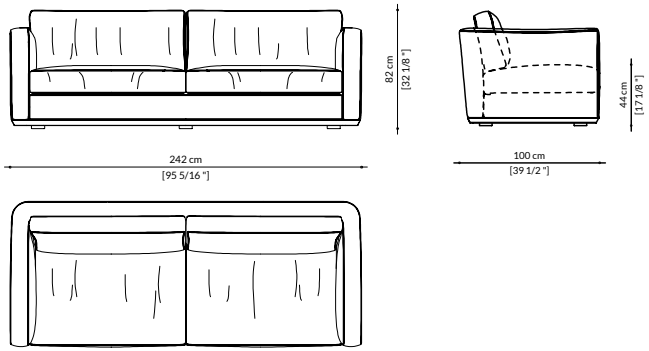

ECOLEATHER | SED.DROM.140.ECO — 8.200,00€
Base in dark stained oak - Ecoleather

FABRIC SUPERIOR | SED.DROM.140.SUP — 9.100,00€
Base in dark stained oak - Fabric Superior

FABRIC DELUXE | SED.DROM.140.DEL — 10.800,00€
Base in dark stained oak - Fabric Deluxe

LEATHER | SED.DROM.140.PEL — 11.900,00€
Base in dark stained oak - Bovine Leather

NABUK | SED.DROM.140.NAB — 13.500,00€
Base in dark stained oak - Nabuk

4 SEATS

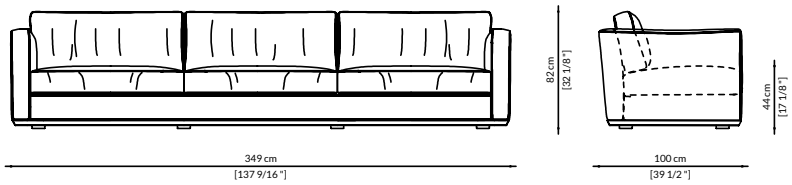

ECOLEATHER | SED.DROM.141.ECO — 10.300,00€
Base in dark stained oak - Ecoleather

FABRIC SUPERIOR | SED.DROM.141.SUP — 11.500,00€
Base in dark stained oak - Fabric Superior

FABRIC DELUXE | SED.DROM.141.DEL — 13.800,00€
Base in dark stained oak - Fabric Deluxe

LEATHER | SED.DROM.141.PEL — 14.800,00€
Base in dark stained oak - Bovine Leather

NABUK | SED.DROM.141.NAB — 15.900,00€
Base in dark stained oak - Nabuk

◄ Lo sviluppo del basamento fino a terra rafforza l'invito alla seduta e al relax.

The extension of the base to the floor emphasises the invitation to sit down and relax.

Dromo

Angular

DESIGN | PAOLO CASTELLI & VITTORIO PARADISO

Finishes of the above picture

Wood
Dark Oak

Fabric Superior
Velvet Mana
Col. 0714 Dove

Matt
Brass

Dromo Sofa nasce come omaggio al grande maestro Carlo Scarpa e alla sua città. Si presenta come una piattaforma sospesa, dove il volume importante della cuscinatura è reso più leggero dalla struttura in rovere massello tinto scuro, impreziosita dagli elementi esagonali in ottone naturale satinato. Il rivestimento è in pelle, nabuk o tessuto con piping in tessuto col. marrone (Ref. Fabric Sateen D6037815 Brown) o in tinta. È disponibile nella versione 3 posti, poltrona e angolare.
Cuscinatura sedile e schienale sfoderabile, imbottitura in poliuretano espanso sagomato a quote differenziate e piuma d'oca.

Dromo Sofa came into being as a tribute to the great master Carlo Scarpa and his town. It appears like a suspended platform where the significant volume of the cushions is rendered lighter by the structure in solid oak dark paintedIt is enriched by precious details such as the hexagonal elements in natural satin brass on the legs of the structure. The upholstery is in leather, nubuck or fabric with piping in fabric col. brown (Ref. Fabric Sateen D6037815 Brown) or matching. Available in three-seat and corner versions. The armchair is also available. Removable covering for seat and back cushions, padding in different density expanded polyurethane added with feather padding.
.

DROMO ANGULAR LEFT - also available right model

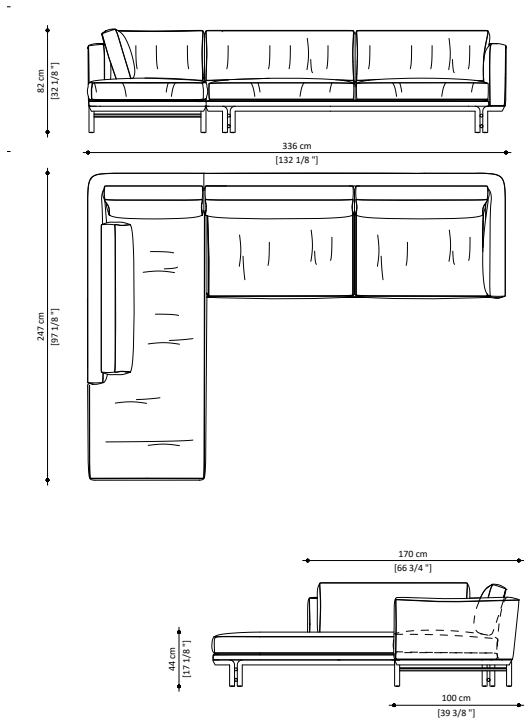

RIGHT/ LEFT
FABRIC SUPERIOR | SED.DROM.110/130.SUP — 19.800,00€
Base in dark stained oak - Piping col. 16 brown
Fabric Superior

FABRIC DELUXE | SED.DROM.110/130.DEL — 22.000,00€
Base in dark stained oak - Piping col. 16 brown
Fabric Deluxe

LEATHER | SED.DROM.110/130.PEL — 24.000,00€
Base in dark stained oak - Piping col. 16 brown
Bovine Leather

NABUK | SED.DROM.110/130.NAB — 26.500,00€
Base in dark stained oak - Piping col. 16 brown
Nabuk

Dromo
Sofa

DESIGN | PAOLO CASTELLI & VITTORIO PARADISO

Finishes of the above picture

Wood
Dark Oak

Matt
Brass

Fabric Superior
Velvet Mana
Col. 0714 Dove

Dromo Sofa nasce come omaggio al grande maestro Carlo Scarpa e alla sua città. Si presenta come una piattaforma sospesa, dove il volume importante della cuscinatura è reso più leggero dalla struttura in rovere massello tinto scuro, impreziosita dagli elementi esagonali in ottone naturale satinato.Il rivestimento è in pelle, nabuk o tessuto con piping in tessuto col. marrone (Ref. Fabric Sateen D6037815 Brown) o in tinta. È disponibile nella versione 3 posti, poltrona e angolare. Cuscinatura sedile e schienale sfoderabile, imbottitura in poliuretano espanso sagomato a quote differenziate e piuma d'oca.

Dromo Sofa came into being as a tribute to the great master Carlo Scarpa and his town. It appears like a suspended platform where the significant volume of the cushions is rendered lighter by the structure in solid oak dark paintedIt is enriched by precious details such as the hexagonal elements in natural satin brass on the legs of the structure. The upholstery is in leather, nubuck or fabric with piping in fabric col. brown (Ref. Fabric Sateen D6037815 Brown) or matching. Available in three-seat and corner versions. The armchair is also available. Removable covering for seat and back cushions, padding in different density expanded polyurethane added with feather padding.

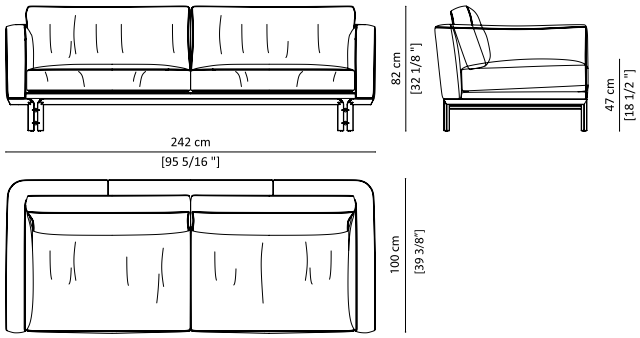

FABRIC SUPERIOR | SED.DROM.120.SUP — 10.900,00€
Base in dark stained oak - Piping col. 16 brown
Fabric Superior

FABRIC DELUXE | SED.DROM.120.DEL — 13.100,00€
Base in dark stained oak - Piping col. 16 brown
Fabric Deluxe

LEATHER | SED.DROM.120.PEL — 14.000,00€
Base in dark stained oak - Piping col. 16 brown
Bovine Leather

NABUK | SED.DROM.120.NAB — 15.900,00€
Base in dark stained oak - Piping col. 16 brown
Nabuk

Dromo
Armchair

DESIGN | PAOLO CASTELLI

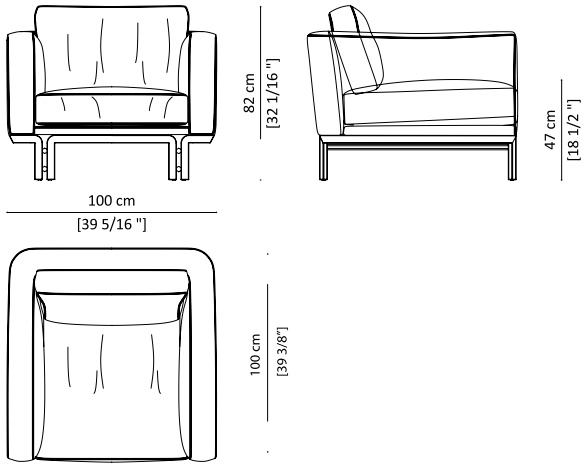

Finishes of the above picture

Wood
Dark Oak

Matt
Brass

Fabric Superior
Velvet Mana
Col. 0714 Dove

Dromo poltrona nasce come omaggio al grande maestro Carlo Scarpa e alla sua città. Si presenta come una piattaforma sospesa, dove il volume importante della cuscinatura è reso più leggero dalla struttura in rovere massello tinto scuro, impreziosita dagli elementi esagonali in ottone naturale satinato.Il rivestimento è in pelle, nabuk o tessuto con piping in tessuto col. marrone (Ref. Fabric Sateen D6037815 Brown) o in tinta.
Cuscinatura sedile e schienale sfoderabile, imbottitura in poliuretano espanso sagomato a quote differenziate.

Dromo armchair born as a tribute to the great master Carlo Scarpa and his town. It appears like a suspended platform where the significant volume of the cushions is rendered lighter by the structure in solid oak dark painted. It is enriched by precious details such as the hexagonal elements in natural satin brass on the legs of the structure. The upholstery is in leather, nubuck or fabric with piping in fabric col. brown (Ref. Fabric Sateen D6037815 Brown) or matching.
Removable covering for seat and back cushions, padding in different density expanded polyurethane.

FABRIC SUPERIOR | SED.DROM.200.SUP — 5.500,00€
Base in dark stained oak - Mat brass detail
Fabric Superior

FABRIC DELUXE | SED.DROM.200.DEL — 6.400,00€
Base in dark stained oak - Mat brass detail
Fabric Deluxe

LEATHER | SED.DROM.200.PEL — 6.700,00€
Base in dark stained oak - Mat brass detail
Bovine Leather

NABUK | SED.DROM.200.NAB — 7.800,00€
Base in dark stained oak - Mat brass detail
Nabuk

◄ Elementi esagonali in ottone naturale satinato.

Hexagonal details in matte natural brass.

Sean
Sofa

DESIGN | PAOLO CASTELLI

Finishes of the above picture

Nabuck
Col. 08 Olive

Bronze Mirrored
Glass Matt

Metal Finish
Matt Gold

Sean divano angolare ha la chiarezza strutturale e le proporzioni limpide di un'architettura. Il suo equilibrio nasce dalla riduzione di qualsiasi elemento superfluo e dalla costruzione proporzionata delle sue componenti. La struttura in legno è rivestita con lamiera metallica finitura oro opaco, innovativo l'inserto in vetro specchiato satinato color bronzo che conferisce leggerezza al divano. Imbottitura in poluretano espanso sagomato a quote differenziate. Rivestimento, non sfoderabile, disponibile in pregiati pellami e tessuti.

A corner sofa that has the structural clarity and clear proportions of architecture. Its balance is the result of the reduction of any superfluous elements and from the proportionate construction of its components. The wooden structure is covered with a metallic gold matt finish, and the bronze mirrored glass matt insert that gives the sofa its lightness is an innovative touch. Padding is made in different density expanded polyurethane.The non removable covers are available in fine leathers and fabrics.

SEAN RIGHT - also available left model

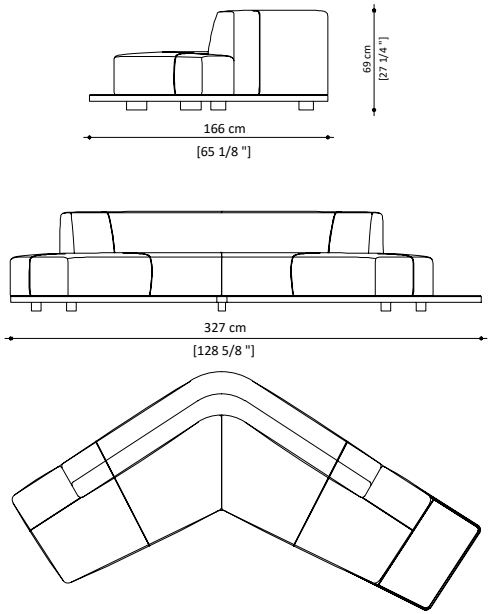

SEAN RIGHT/ LEFT FABRIC SUPERIOR | SED.SEAN.110/100.SUP Fabric Superior	13.200,00€
FABRIC DELUXE | SED.SEAN.110/100.DEL Fabric Deluxe	15.550,00€
LEATHER | SED.SEAN.110/100.PEL Bovine Leather	15.350,00€
NABUK | SED.SEAN.110/100.NAB Nabuk	15.900,00€

Elegance
Sofa

DESIGN | PAOLO CASTELLI

Finishes of the above picture

Metal Finish
Matt Gold

Fabric Superior
Velvet Sig
Col. 20
Bordeaux

Elegance è un divano dal confort avvolgente e dalle forme lineari e classiche, impreziosito dal design dei piedini in metallo. Si compone di una struttura interna in acciaio e multistrato di legno con imbottitura e cuscinatura in poliuretano espanso sagomato a quote differenziate. I piedini in metallo esaltano la linea e hanno una pregiata finitura oro opaco. Elegance Sofa è personalizzabile con pregiati tessuti, raffinati pelli bovine pieno fiore e nabuk. Cuscinatura sedile e schienale sfoderabile.

Elegance is a sofa boasting enfolding comfort and clean, classic lines enriched by the detail of the frame and its characteristic metal feet.
The structure is made of steel and multi-layer wood while the padding and cushions are stuffed with different density expanded polyurethane. Metal feets that embellish the line have a matt gold finish. Elegance Sofa can be personalized in a wide range of elegant fabrics, fine leather and nubuck. Removable covering for seat and back cushions.

L 205

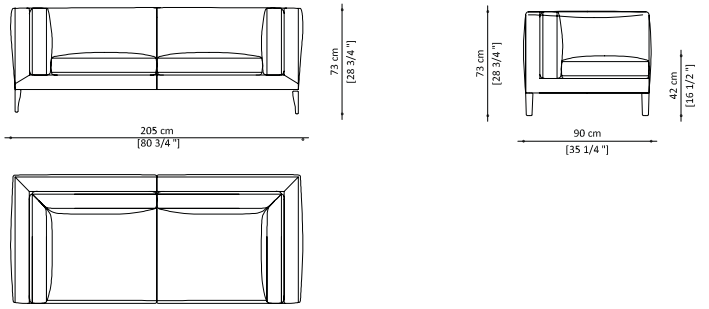

ECOLEATHER | SED.ELEG.110.ECO Eco-Friendly Leather	7.030,00€
FABRIC SUPERIOR | SED.ELEG.110.SUP Fabric Superior	7.485,00€
FABRIC DELUXE | SED.ELEG.110.DEL Fabric Deluxe	8.960,00€
LEATHER | SED.ELEG.110.PEL Bovine Leather	9.980,00€
NABUK | SED.ELEG.110.NAB Nabuk	10.885,00€

L 256

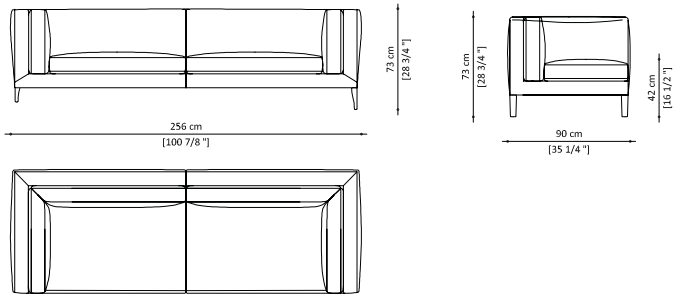

ECOLEATHER | SED.ELEG.100.ECO Eco-Friendly Leather	8.505,00€
FABRIC SUPERIOR | SED.ELEG.100.SUP Fabric Superior	9.072,00€
FABRIC DELUXE | SED.ELEG.100.DEL Fabric Deluxe	10.773,00€
LEATHER | SED.ELEG.100.PEL Bovine Leather	11.907,00€
NABUK | SED.ELEG.100.NAB Nabuk	13.041,00€

◄ Elegante piedino rielaborazione del classico modello a cipolla dei mobili di inizio secolo scorso.

Elegant feet inspired by the classic ‘onion’ model of early 1900.

Elegance

Chaise Longue

DESIGN | PAOLO CASTELLI

Finishes of the above picture

Metal Finish
Matt Gold

Fabric Superior
Velvet Mana
Col. 2442
Green Grey

Elegance Chaise Lounge è un imbottito dalle forme lineari, ideali da bordo del letto ma valide anche per ingressi e camere guardaroba. Ha una struttura interna in multistrato di legno con imbottitura in poliuretano a densità variabile.
E' decorato con cuscini cilindrici e i piedini sono in metallo con finitura oro opaco. E' personalizzabile con pregiati tessuti, raffinati pelli bovine pieno fiore e nabuk.

Elegance Chaise Lounge is a padded chair with an elegant design. Ideal in entrances, living spaces, wardrobe areas and bedrooms.
The structure is made of multi-layer wood with padding made in different density expanded polyurethane.
It is decorated with a cylindrical cushion and the metal feet have a matt gold finish. The product can be personalized in a wide range of elegant fabrics, fine leather and nubuck.

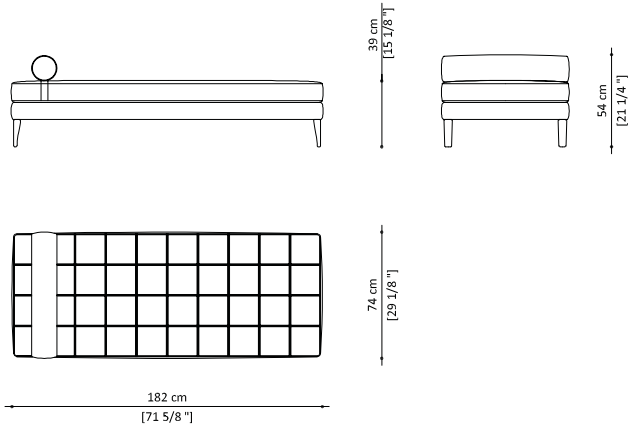

ECOLEATHER | SED.ELEG.300.ECO Eco-Friendly Leather	3.630,00€
VELVET SUPERIOR | SED.ELEG.300.SUP Fabric Superior	4.090,00€
VELVET DELUXE | SED.ELEG.300.DEL Fabric Deluxe	4.480,00€
LEATHER | SED.ELEG.300.PEL Bovine Leather	4.880,00€
NABUK | SED.ELEG.300.NAB Nabuk	5.445,00€

(1 round cushion included)

◄ Elegante piedino rielaborazione del classico modello a cipolla dei mobili di inizio secolo scorso.

Elegant feet inspired by the classic ‘onion’ model of early 1900.

Elegance
Armchair

DESIGN | PAOLO CASTELLI

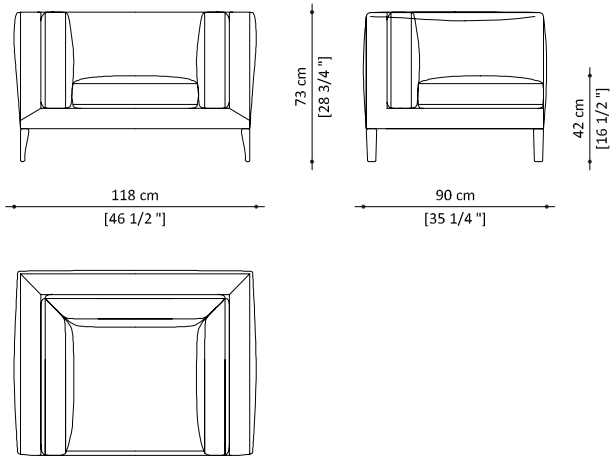

Finishes of the above picture

Metal Finish
Matt Gold

Fabric Deluxe
Hammered Velvet
Col. 35971918
Pearl

Si compone di una struttura interna in acciaio e multistrato di legno con imbottitura e cuscinatura in poliuretano a densità variabile.
I piedini sono in metallo con finitura oro opaco.
Elegance Armchair è personalizzabile con pregiati tessuti, raffinati pelli bovine pieno fiore e nabuk.

The structure is made of steel and multi-layer wood while the padding and cushions are stuffed with different density expanded polyurethane.
The metal feet have a matt gold finish. Elegance Armchair can be personalized in a wide range of elegant fabrics, fine leather and nubuck.

ECOLEATHER | SED.ELEG.200.ECO Eco-Friendly Leather	4.450,00€
FABRIC SUPERIOR | SED.ELEG.200.SUP Fabric Superior	4.880,00€
FABRIC DELUXE | SED.ELEG.200.DEL Fabric Deluxe	5.790,00€
LEATHER | SED.ELEG.200.PEL Bovine Leather	6.237,00€
NABUK | SED.ELEG.200.NAB Nabuk	6.695,00€

Elegance
Bench

DESIGN | PAOLO CASTELLI

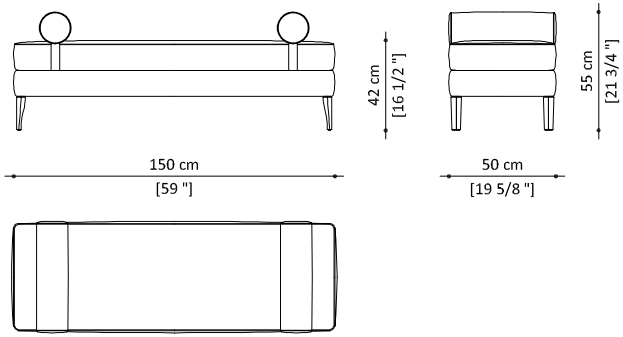

Finishes of the above picture

Wood Painted
Matt Gold

Fabric Superior
Velvet Mana
Col. 2442
Green Grey

Elegance Bench è un imbottito dalle forme lineari, ideali da bordo del letto ma valide anche per ingressi e camere guardaroba.Ha una struttura interna in multistrato di legno con imbottitura in poliuretano a densità variabile.
E' decorato con cuscini cilindrici e i piedini sono in metallo con finitura oro opaco. E' personalizzabile con pregiati tessuti, raffinati pelli bovine pieno fiore e nabuk.

Elegance Bench is a padded chair with an elegant design. Ideal in entrances, living spaces, wardrobe areas and bedrooms.
The structure is made of multi-layer wood with padding made in different density expanded polyurethane.
It is decorated with a cylindrical cushion and the metal feet have a matt gold finish. The product can be personalized in a wide range of elegant fabrics, fine leather and nubuck.

ECOLEATHER | SED.ELEG.400.ECO Eco-Friendly Leather	3.175,00€
FABRIC SUPERIOR | SED.ELEG.400.SUP Fabric Superior	3.515,00€
FABRIC DELUXE | SED.ELEG.400.DEL Fabric Deluxe	3.860,00€
LEATHER | SED.ELEG.400.PEL Bovine Leather	4.196,00€
NABUK | SED.ELEG.400.NAB Nabuk	4.650,00€

(2 round cushions included)

Orus
Sofa

DESIGN | PAOLO CASTELLI

Finishes of the above picture

Metal Finish
Matt Gold

Fabric Superior
Velvet Sig
Col. 20
Bordeaux

Orus Sofa è un divanetto compatto ed elegante con uno schienale avvolgente, un regale mantello che vi accoglie tra i suoi drappi e ascolta le più frizzanti conversazioni.
Divanetto a due sedute dal richiamo "belle époque", consta di una struttura interna in multistrato di legno curvato con imbottitura in poliuretano a densità variabile. Ha un rivestimento, non sfoderabile, personalizzabile con pregiati tessuti, raffinate pelli bovine pieno fiore e nabuk. Il divano poggia su di una struttura in metallo con gambe disposte ad incrocio, arricchite con preziosa finitura oro opaco.

Orus Sofa is a smart and compact love seat featuring an enchanting seatback, a noble cover embracing you among its drapes and capturing the most sparkling speeches.
Two-seat sofa evoking the charme of belle époque, it consists in a curved multilayer wooden internal structure, the padding is made from different density expanded polyurethane. The non removable cover can be personalized with graceful fabrics, refined bovine grain leather and nubuck. Its base is made of an all-metal structure with criss-crossed legs enriched by a precious mat gold finish.

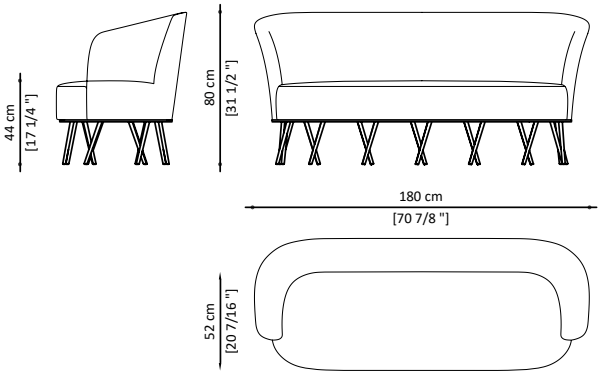

FABRIC SUPERIOR | SED.ORUS.100.SUP Matt gold metal base Fabric Superior	6.500,00€
FABRIC DELUXE | SED.ORUS.100.DEL Matt gold metal base Fabric Deluxe	7.100,00€
LEATHER | SED.ORUS.100.PEL Matt gold metal base Bovine Leather	7.380,00€
NABUK | SED.ORUS.100.NAB Matt gold metal base Nabuk	7.825,00€

Orus

Dormeuse

DESIGN | PAOLO CASTELLI

Finishes of the above picture

Metal Finish
Matt Gold

Fabric Superior
Velvet Sig
Col. 07
Graphite

Orus dormeuse ha forme seducenti ed avvolgenti dal richiamo "belle époque".
Perfetta per ambienti da conversazione o privati, consta di una struttura interna in multistrato di legno curvato con imbottitura in poliuretano a densità variabile. Ha un rivestimento, non sfoderabile, personalizzabile con pregiati tessuti, raffinate pelli bovine pieno fiore e nabuk. La dormeuse poggia su di una struttura in metallo con gambe disposte ad incrocio, arricchite con preziosa finitura oro opaco.

Orus dormeuse owns enchanting and embracing shapes recalling the "belle-époque" charme.
Ideal for conversation or private living spaces, it consists in a curved multilayer wooden internal structure, the padding is made from different density expanded polyurethane. The non removable cover can be personalized with graceful fabrics, refined bovine grain leather and nubuck. The dormeuse lies on an all-metal structure with criss-crossed legs enriched by a precious mat gold finish.

ORUS DORMEUSE RIGHT - also available left model

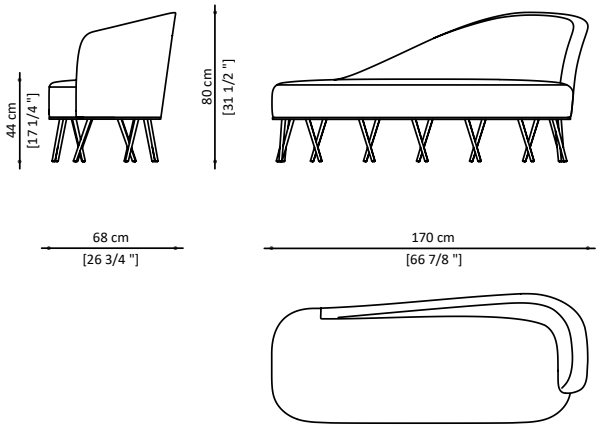

RIGHT/ LEFT
FABRIC SUPERIOR | SED.ORUS.110/111.SUP — 6.237,00€
Matt gold metal base
Fabric Superior

FABRIC DELUXE | SED.ORUS.110/111.DEL — 6.804,00€
Matt gold metal base
Fabric Deluxe

LEATHER | SED.ORUS.110/111.PEL — 7.150,00€
Matt gold metal base
Bovine Leather

NABUK | SED.ORUS.110/111.NAB — 7.600,00€
Matt gold metal base
Nabuk

Orus

Bench

DESIGN | PAOLO CASTELLI

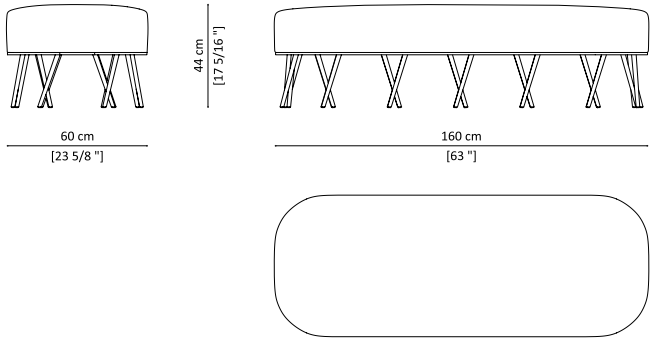

Finishes of the above picture

Metal Finish
Matt Gold

Nabuk
Col. 16 Brown

Orus bench ha forme seducenti ed avvolgenti dal richiamo "belle époque".
Perfetta per ingressi, ambienti da conversazione o privati, consta di una struttura interna in multistrato di legno curvato con imbottitura in poliuretano a densità variabile. Ha un rivestimento, non sfoderabile, personalizzabile con pregiati tessuti, raffinate pelli bovine pieno fiore e nabuk. La panca poggia su di una preziosa struttura in metallo con gambe disposte ad incrocio, arricchite con preziosa finitura oro opaco.

Orus bench owns enchanting and embracing shapes recalling the "belle-epoque" charme.
Ideal for conversation or private living spaces, it consists in a curved multilayer wooden internal structure, the padding is made from different density expanded polyurethane. The non removable cover can be personalized with graceful fabrics, refined bovine grain leather and nubuck. The bech lies on a precious all-metal structure with criss-crossed legs enriched by a precious mat gold finish.

FABRIC SUPERIOR | SED.ORUS.400.SUP — 4.310,00€
Matt gold metal base
Fabric Superior

FABRIC DELUXE | SED.ORUS.400.DEL — 4.770,00€
Matt gold metal base
Fabric Deluxe

LEATHER | SED.ORUS.400.PEL — 5.100,00€
Matt gold metal base
Bovine Leather

NABUK | SED.ORUS.400.NAB — 5.450,00€
Matt gold metal base
Nabuk

Venice
Sofa

DESIGN | PAOLO CASTELLI

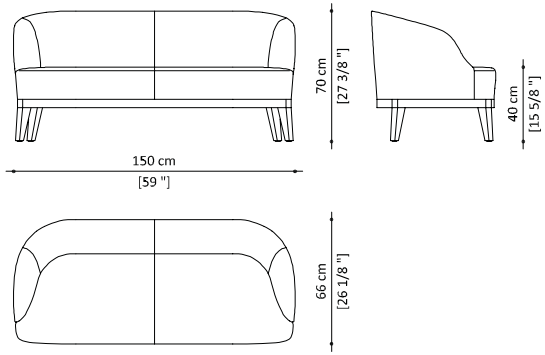

Finishes of the above picture

Wood Painting
Pearl Beige
Ral 1035

Bovine Leather
Col. 634
Oasi

Venice Sofa è un divanetto imbottito dalle forme morbide e contenute che lo rendono adatto a tutti gli ambienti del vivere contemporaneo.
È realizzato con una struttura interna in multistrato di legno curvato con imbottitura in poliuretano a densità variabile.
Ha un rivestimento, non sfoderabile, personalizzabile con pregiati tessuti, raffinate pelli bovine pieno fiore, e nabuk. Il divano poggia su una struttura in legno laccato con vernice metallica color beige perlato Ral 1035.

Venice Sofa is a small padded sofa with a soft looking shape that makes it ideal for any contemporary living space.
Its structure is made of curved multi-layer wood padded with different density polyurethane. Its cover, which cannot be removed, can be personalised in a wide rangez of elegant fabrics, fine leather and nubuck.
The sofa base is made of wood painted with a metal finish pearl beige Ral 1035.

ECOLEATHER | SED.VENI.100.ECO Base in wood matt pearl beige painted Ral 1035 Eco-Friendly Leather	3.990,00€
FABRIC SUPERIOR | SED.VENI.100.SUP Base in wood matt pearl beige painted Ral 1035 Fabric Superior	4.350,00€
FABRIC DELUXE | SED.VENI.100.DEL Base in wood matt pearl beige painted Ral 1035 Fabric Deluxe	4.780,00€
LEATHER | SED.VENI.100.PEL Base in wood matt pearl beige painted Ral 1035 Bovine Leather	5.600,00€
NABUK | SED.VENI.100.NAB Base in wood matt pearl beige painted Ral 1035 Nabuk	6.300,00€

Inspiration
Fine furniture and lighting

Venice

Bench & Pouf

DESIGN | PAOLO CASTELLI

Finishes of the above picture

Wood Painting
Pearl Beige
Ral 1035

Fabric Deluxe
Orfe Col. 0637
Ivory

Wood
Painted
Black

Fabric Decorative
Myrrhe Col. 01
Gold

Completano la gamma della famiglia Venice le declinazioni bench e pouf. Entrambi poggiamo su una struttura in legno di faggio verniciato con imbottitura in poliuretano a densità variabile e hanno un rivestimento, non sfoderabile, personalizzabile con pregiati tessuti, raffinate pelli bovine pieno fiore e nabuk.

The bench and pouf complete the range of the Venice family. Both rest on a lacquered beech wood structure padded with different density polyurethane, covered with non removable covers that can be customised with fine fabrics, refined full grain cowhide and nubuck leather.

BENCH

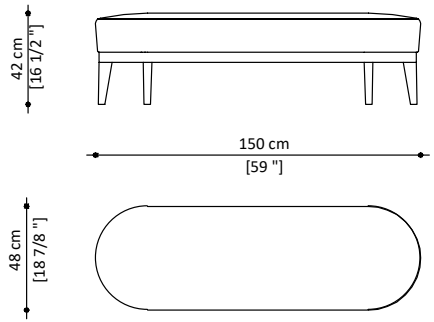

ECOLEATHER | SED.VENI.400.ECO — 2.650,00€
Base in wood matt pearl beige painted Ral 1035
Eco-Friendly Leather

FABRIC SUPERIOR | SED.VENI.400.SUP — 2.950,00€
Base in wood matt pearl beige painted Ral 1035
Fabric Superior

FABRIC DELUXE | SED.VENI.400.DEL — 3.300,00€
Base in wood matt pearl beige painted Ral 1035
Fabric Deluxe

LEATHER | SED.VENI.400.PEL — 3.550,00€
Base in wood matt pearl beige painted Ral 1035
Bovine Leather

NABUK | SED.VENI.400.NAB — 3.980,00€
Base in wood matt pearl beige painted Ral 1035
Nabuk

POUF

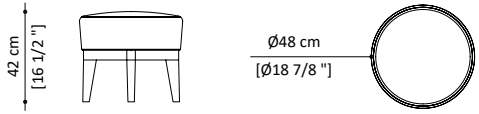

ECOLEATHER | SED.VENI.500.ECO — 1.490,00€
Base in wood matt black painted
Eco-Friendly Leather

FABRIC SUPERIOR | SED.VENI.500.SUP — 1.700,00€
Base in wood matt black painted
Fabric Superior

FABRIC DELUXE | SED.VENI.500.DEL — 1.850,00€
Base in wood matt black painted
Fabric Deluxe

LEATHER | SED.VENI.500.PEL — 2.050,00€
Base in wood matt black painted
Bovine Leather

NABUK | SED.VENI.500.NAB — 2.350,00€
Base in wood matt black painted
Nabuk

Venice
Armchair

DESIGN | PAOLO CASTELLI

Finishes of the above picture

Wood Painting
Pearl Beige
Ral 1035

Bovine Leather
Col. 634
Oasi

Venice Armchair è una comoda poltroncina imbottita, dalle forme morbide e contenute, adatta a tutti gli ambienti del vivere contemporaneo.
È realizzata con una struttura interna in multistrato di legno curvato con imbottitura in poliuretano a densità variabile. Ha un rivestimento, non sfoderabile, personalizzabile con pregiati tessuti, raffinate pelli bovine pieno fiore e nabuk. La seduta poggia su una struttura in legno laccato con vernice metallica color beige perlato RAL 1035.

Venice Armchair is a small padded seat with a soft looking shape that makes it ideal for any contemporary living space.
Its structure is made of curved multi-layer wood padded with different density polyurethane. Its cover, which cannot be removed, can be personalized in a wide range of elegant fabrics, fine leather and nubuck. The armchair base is made of wood painted with a pearl-beige metal finish. RAL 1035.

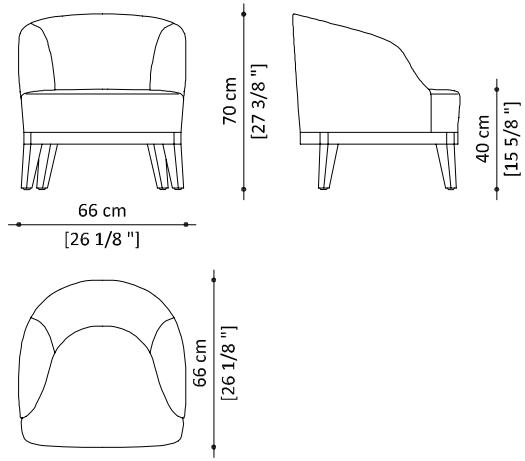

ECOLEATHER | SED.VENI.210.ECO — 2.390,00€
Pearl beige varnished legs
Eco-Friendly Leather

FABRIC SUPERIOR | SED.VENI.210.SUP — 2.650,00€
Pearl beige varnished legs
Fabric Superior

FABRIC DELUXE | SED.VENI.210.DEL — 2.950,00€
Pearl beige varnished legs
Fabric Deluxe

LEATHER | SED.VENI.210.PEL — 3.200,00€
Pearl beige varnished legs
Bovine Leather

NABUK | SED.VENI.210.NAB — 3.550,00€
Pearl beige varnished legs
Nabuk

Confort e versatilità di utilizzo soprattutto in ambito contract.

Ideal in contract commissions for his comfort and versatility.

Venice

Bergere

DESIGN | PAOLO CASTELLI

Finishes of the above picture

Wood
Painted
Black

Fabric Superior
Velvet Sig Col. 03
Dark Blue

Poltrona dalle linee avvolgenti e dall'alto schienale che amplia la collezione Venice. Adatta in salotto come nella zona night, è caratterizzata da una struttura interna in multistrato di legno curvato con imbottitura
in poliuretano a densità variabile. Ha un rivestimento, non sfoderabile, personalizzabile con pregiati tessuti, raffinate pelli bovine pieno fiore e nabuk. La seduta poggia su una struttura in legno di faggio verniciato nero opaco.

Armchair with enveloping lines and high-backed which expands the Venice collection. Suitable for the living room as for the night zone, is characterized by an internal structure in curved wood with padding in variable-density polyurethane-finishing. It has a non-removable cover customizable with fine fabrics, fine full-grain leather and nubuk finishing. The seat rests on a wooden beech frame with dark mat finishing.

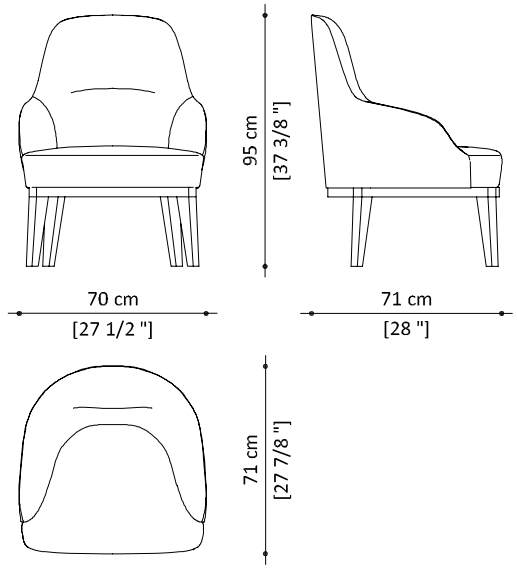

ECOLEATHER | SED.VENI.220.ECO — 2.680,00€
Black mat varnished legs
Eco-Friendly Leather

FABRIC SUPERIOR | SED.VENI.220.SUP — 2.850,00€
Black mat varnished legs
Fabric Superior

FABRIC DELUXE | SED.VENI.220.DEL — 3.100,00€
Black mat varnished legs
Fabric Deluxe

LEATHER | SED.VENI.220.PEL — 3.300,00€
Black mat varnished legs
Bovine Leather

NABUK | SED.VENI.220.NAB — 3.550,00€
Black mat varnished legs
Nabuk

Venice Swing
Armchair

DESIGN | PAOLO CASTELLI

Finishes of the above picture

Metal Finish
Matt Gold

Fabric Decorative
Myrrhe
Col. 04 Grey
(back cover)

Fabric Superior
Velvet Sig
Col. 29 Beige
(front cover)

Poltrona dalle linee avvolgenti e dall'alto schienale che amplia la collezione Venice. Adatta in salotto come nella zona night, è caratterizzata da una struttura interna in multistrato di legno curvato con imbottitura in poliuretano a densità variabile. Ha un rivestimento, non sfoderabile, personalizzabile con pregiati tessuti, raffinate pelli bovine pieno fiore e nabuk. La seduta poggia su un basamento girevole in laminato metallico oro satinato opaco, completo di meccanismo di ritorno.

An armchair with enveloping lines and a high backrest. This addition to the Venice collection is as well-suited to the living room as it is to the bedroom and features an internal structure in shaped plywood with variable density polyurethane padding and a customisable non removable cover available in fine fabrics, refined full grain cowhide and nubuck leather. The seat is mounted on a swivel base of matt satin finish gold metal laminate with return mechanism.

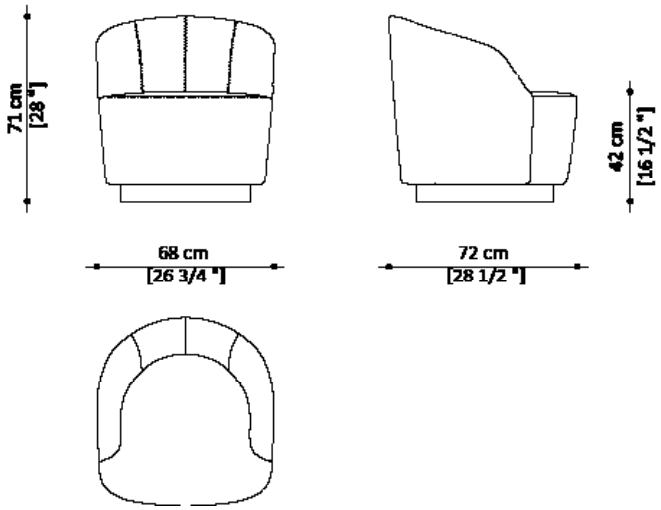

ECO-LEATHER | SED.VENI.230.ECO Eco-Friendly Leather	3.860,00€
FABRIC SUPERIOR | SED.VENI.230.SUP Fabric Superior	4.200,00€
FABRIC DELUXE | SED.VENI.230.DEL Fabric Deluxe	4.550,00€
LEATHER | SED.VENI.230.PEL Bovine Leather	4.780,00€
NABUK | SED.VENI.230.NAB Nabuk	5.100,00€

La seduta poggia su un basamento girevole con meccanismo di ritorno nella posizione iniziale.

The seat lies on a swivel base with return mechanism to initial position.

Venice
Office

DESIGN | PAOLO CASTELLI

Finishes of the above picture

Metal Finish
Black Nickel
Polished

Nabuk
Col. 15
Taupe

Poltrona che amplia la collezione Venice con questa proposta da ufficio dalle linee avvolgenti e dall'alto schienale. Struttura interna in multistrato di legno curvato con imbottitura in poliuretano a densità variabile. Ha un rivestimento, non sfoderabile, personalizzabile con pregiati tessuti, raffinate pelli bovine pieno fiore e nabuk. La seduta poggia su una base metallica color nichel nero lucido.

An armchair with enveloping lines and a high backrest designed for office spaces. This addition to the Venice collection features an internal structure in shaped plywood with variable density polyurethane padding and a customisable non removable cover, available in fine fabrics, refined full grain cowhide and nubuck leather. The seat is mounted on a shiny black nickel metal base.

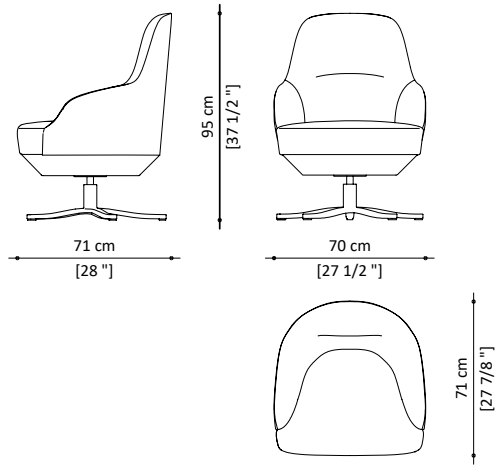

ECOLEATHER | SED.VENI.240.ECO — 3.990,00€
Black nickel metal base
Eco-Friendly Leather

LEATHER | SED.VENI.240.PEL — 5.400,00€
Black nickel metal base
Bovine Leather

NABUK | SED.VENI.240.NAB — 5.900,00€
Black nickel metal base
Nabuk

U

Lounge

DESIGN | VITTORIO PARADISO

Finishes of the above picture

Metal Finish
Black Nickel
Polished

Leather
Col. Natural

Metal Finish
Polished Gold

Leather
Col. Sand

Raffinata poltroncina i cui principali punti di forza sono la comodità e la forte personalità, che si uniscono a formare soluzioni estetiche e strutturali di grande impatto.La forma invitante è definita da una profondità accentuata e da un fronte leggermente inclinato.
La struttura, che avvolge elegantemente il corpo, è disponibile in finitura lucida nichel nero oppure oro, con rivestimenti in cuoio color sabbia, naturale o nero, e cuciture a vista. La seduta invece appare come sospesa, fluttuante, poiché semplicemente calzata nello schienale e infilata nei braccioli.Braccioli in cuoio in tinta con i rivestimenti della struttura.

A refined chair the main strengths of which are comfort and great personality, combining to form high-impact aesthetic and structural solutions.
The alluring shape is outlined by an accentuated depth and a slightly tilted front.
The structure elegantly embraces the body and comes in polished metal, black nichel and gold finishes, with sand-coloured leather upholstery featuring visible stitching (also available black or natural leather). The seat fits simply into the backrest and slots into the armrests, making it look almost as though it is suspended, floating. Available in leather whith matching armrests.

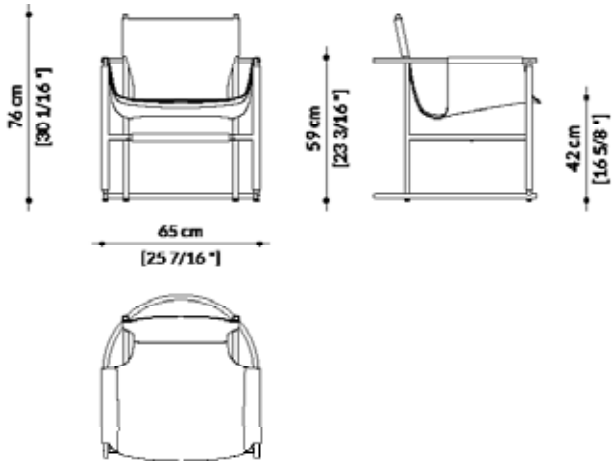

BLACK NICHEL POLISHED | SED.UCHA.700.PEL 3.400,00€
Metal frame Black Nichel polished
Seat, back and frame details made in leather - Available colours Natural leather or sand

POLISHED GOLD | SED.UCHA.701.PEL 3.900,00€
Metal frame Polished Gold
Seat, back and frame details made in leather - Available colours Natural leather or sand

La seduta in cuoio appare come sospesa, perché calzata nello schienale e nei braccioli.

Suspended seat, hanged both to the back and the armrests.

Parabolica
Armchair

DESIGN | VITTORIO PARADISO

Finishes of the above picture

Metal Finish
Matt Bronzed
Brass

Fabric Deluxe
Jacquard Twist
CA 1570/071

Alternative frame finish

Fabric Deluxe
Jacquard Twist
CA 1570/082

Metal Finish
Polished Gold

Parabolica Armchair è una poltroncina lussuosa, adatta a zone lounge e di attesa, ingressi e zone living, ideale per conversare. La seduta si distingue per la forma della struttura che ha l'effetto di una curva parabolica, da cui ne deriva il nome. Caratterizzata da un sofisticato telaio in metallo con trattamento galvanico finitura bronzo ottone opaco oppure oro lucido, la seduta è realizzata con una comoda imbottitura in poliuretano espanso sagomato a quote differenziate e con braccioli e cuscinetto in piuma d'oca rivestiti in pelle color beige. Il rivestimento, non sfoderabile, è personalizzabile con eleganti tessuti, pregiata pelle bovina e nabuk.

Parabolica Armchair is a delicate size luxury seat, suitable in lounging and waiting areas, entrances and living spaces, ideal for conversation. It stands out for the shape of the seat that has the effect of a parabola, from which it takes its name.
Defined by a sophisticated metal structure with a galvanic finish Matt bronzed brass or polished gold, the armchair is padded with different density expanded polyurethane and the armrests and the goose feather little cushion are covered in beige bovine leather.
The non-removable cover can be customized with elegant fabrics, fine leather and nubuck.

ARMCHAIR

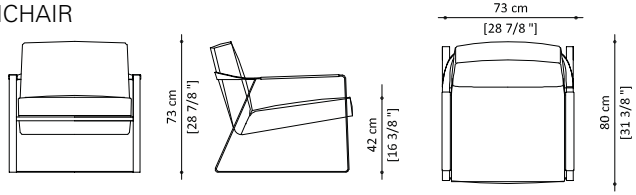

GOLD / ECOLEATHER | SED.PARA.200.ECO Metal base polished gold - Eco-Friendly Leather	4.195,00€
GOLD / FABRIC SUPERIOR | SED.PARA.200.SUP Metal base polished gold - Fabric Superior	4.430,00€
GOLD / FABRIC DELUXE | SED.PARA.200.DEL Metal base polished gold - Fabric Deluxe	4.990,00€
GOLD / LEATHER | SED.PARA.200.PEL Metal base polished gold - Bovine Leather	5.100,00€
GOLD / NABUK | SED.PARA.200.NAB Metal base polished gold - Nabuk	5.560,00€
MATT BRONZED BRASS /ECOLEATHER | SED.PARA.201.ECO Metal base polished gold - Eco-Friendly Leather	4.365,00€
MATT BRONZED BRASS /FABRIC SUPERIOR | SED.PARA.201.SUP Metal base polished gold - Fabric Superior	4.605,00€
MATT BRONZED BRASS/ FABRIC DELUXE | SED.PARA.201.DEL Metal base polished gold - Fabric Deluxe	5.190,00€
MATT BRONZED BRASS/ LEATHER | SED.PARA.201.PEL Metal base polished gold - Bovine Leather	5.300,00€
MATT BRONZED BRASS/ NABUK | SED.PARA.201.NAB Metal base polished gold - Nabuk	5.790,00€

OTTOMAN

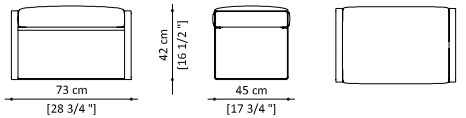

GOLD/ ECOLEATHER | SED.PARA.500.ECO Metal base polished gold - Eco-Friendly Leather	2.500,00€
GOLD/ FABRIC SUPERIOR | SED.PARA.500.SUP Metal base polished gold - Fabric Superior	2.600,00€
GOLD/ FABRIC DELUXE | SED.PARA.500.DEL Metal base polished gold - Fabric Deluxe	2.850,00€
LEATHER | SED.PARA.500.PEL Metal base polished gold - Bovine Leather	2.900,00€
NABUK | SED.PARA.500.NAB Metal base polished gold - Nabuk	3.100,00€
MATT BRONZED BRASS / ECOLEATHER | SED.PARA.501.ECO Metal base polished gold - Eco-Friendly Leather	2.600,00€
MATT BRONZED BRASS /FABRIC SUPERIOR | SED.PARA.501.SUP Metal base polished gold - Fabric Superior	2.700,00€
MATT BRONZED BRASS / FABRIC DELUXE | SED.PARA.501.DEL Metal base polished gold - Fabric Deluxe	2.960,00€
MATT BRONZED BRASS / LEATHER | SED.PARA.501.PEL Metal base polished gold - Bovine Leather	3.015,00€
MATT BRONZED BRASS / NABUK | SED.PARA.501.NAB Metal base polished gold - Nabuk	3.225,00€

◄ Curvatura parabolica della struttura realizzata artigianalmente da un unico pezzo.

Parabolic curve of the structure handcrafted from a unique piece.

Lady Peacock
Armchair

DESIGN | CRISTIANO GATTO

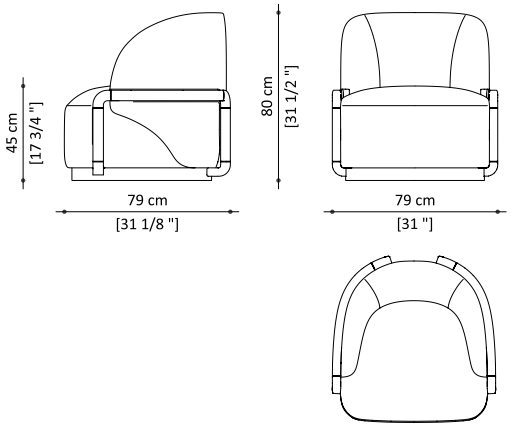

Finishes of the above picture

Fabric Superior
Velvet Mana
Col. 0714 Beige

Wood
Dark Oak

Metal Finish
Matt Gold

Eleganza inglese per una poltroncina raffinata e contemporanea, il cui elemento caratteristico è il bracciolo in rovere tinto scuro che avvolge lo schienale. È realizzata con una struttura interna in multistrato di legno curvato con imbottitura in poliuretano a densità variabile. Ha un rivestimento non sfoderabile personalizzabile con pregiati tessuti, raffinate pelli bovine pieno fiore e nabuk. La seduta poggia su una base in legno color rovere tinto scuro rivestita con profilo metallico con finitura oro opaco, o su richiesta è disponibile la base interamente realizzata in legno finitura rovere tinto scuro.

English noblesse for a refined and contemporary chaise whose main feature is the armrest in dark stained oak embracing its back. Realised with an internal multi layer curved wooden structure padded with different density expanded polyurethane. The non removable upholstering can be personalised with noble fabrics, fine bovine grain leather and nubuck. The seat lies on a wooden base dark oak finished covered with a metal profile mat gold finished, or in alternative in wood dark oak finish.

SUPERIOR | SED.LPEA.200.SUP — 5.560,00€
Base in oak finish with mat gold metal detail - Fabric Superior

DELUXE | SED.LPEA.200.DEL — 6.237,00€
Base in oak finish with mat gold metal detail - Fabric Deluxe

LEATHER | SED.LPEA.200.PEL — 6.690,00€
Base in oak finish with mat gold metal detail - Bovine Leather

NABUCK | SED.LPEA.200.NAB — 7.030,00€
Base in oak finish with mat gold metal detail - Nabuk

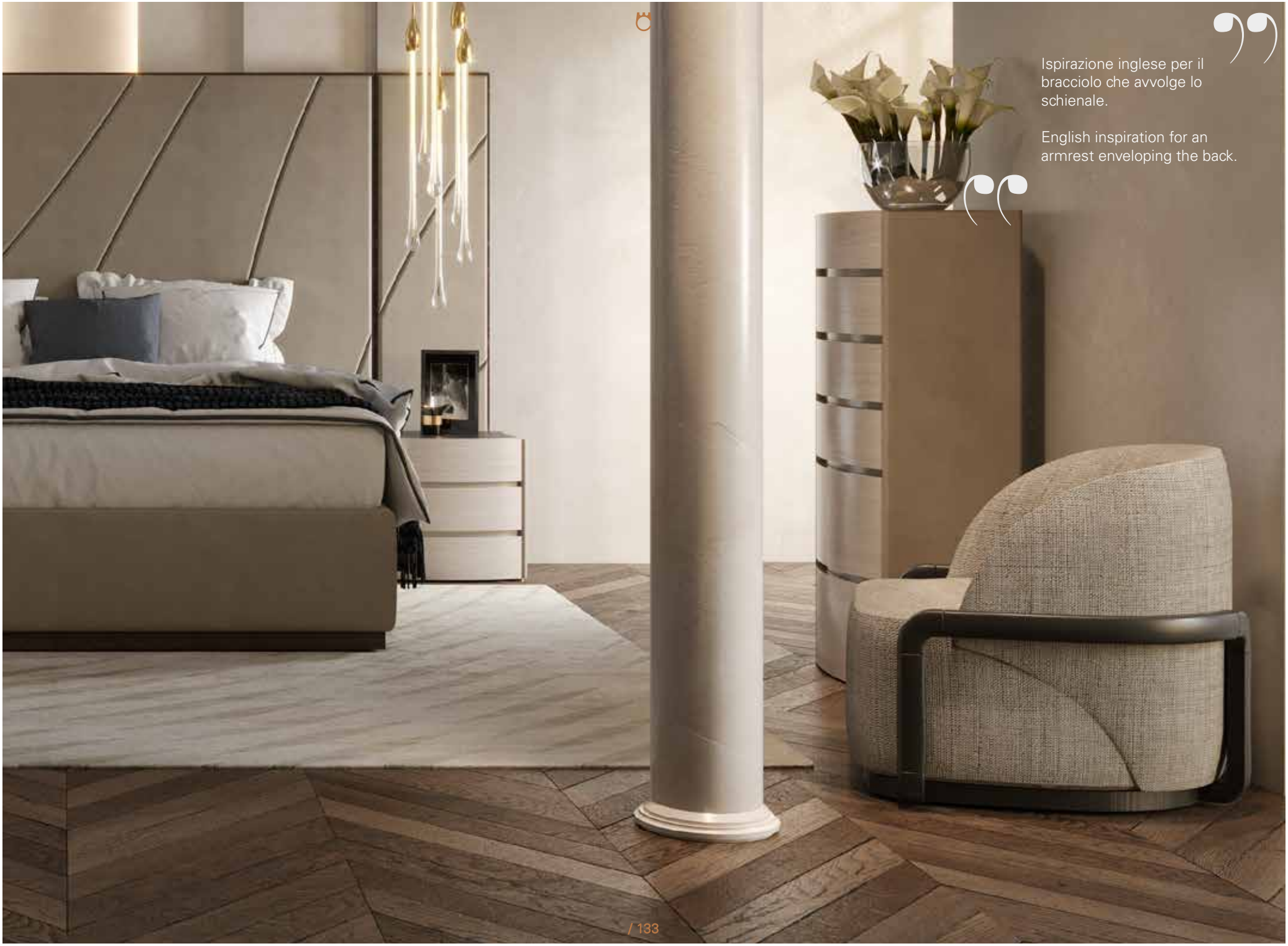

Ispirazione inglese per il bracciolo che avvolge lo schienale.

English inspiration for an armrest enveloping the back.

Inspiration

Fine furniture and lighting

PAOLO CASTELLI

Contenitori e Librerie

Storage & Bookcase

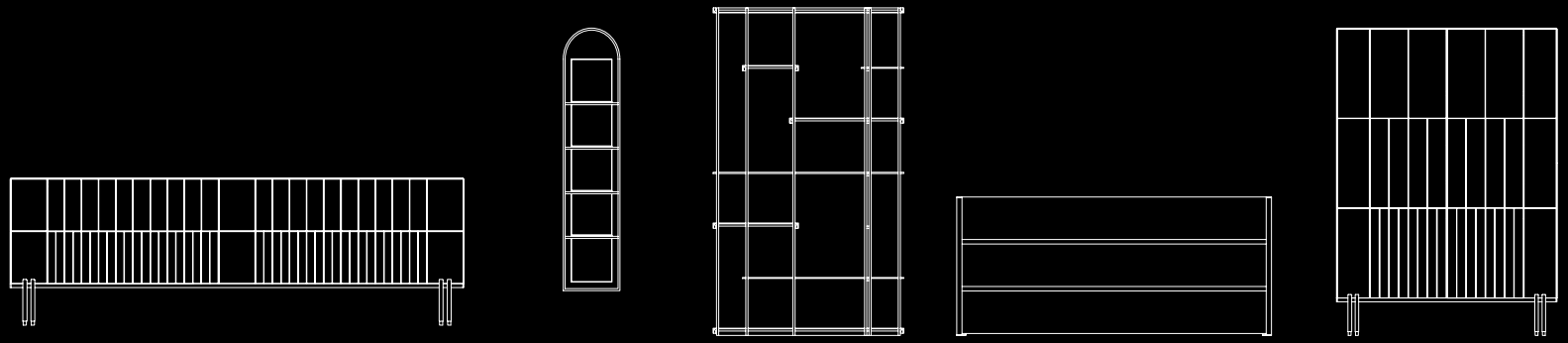

Uffizio

Bookcase

DESIGN | VITTORIO PARADISO

Finishes of the above picture

Grey Mirrored Glass Matt

Metal Finish Bronze Shadow Matt

Transparent glass col. Avana

Libreria luminosa da parete composta da struttura in metallo finitura Bronze Shadow opaco, ripiani in vetro trasparente col. Avana e schiena a specchio grigio satinato con LED integrato. Completa di fissaggio a parete. Disponibile in 2 versioni: con 4 ripiani o 3 per alloggiare oggetti più alti. Temperatura led 2700° K.

Wall-mounted illuminated bookcase consisting of a metal structure with a matt Bronze Shadow matt finish, transparent glass shelves col. Avana and a satin-finish grey mirrored glass matt back with LED system incorporated, complete with wall fixture. Available in two options: 4 shelves or 3 shelves to storage taller objects. Led colour temperature 2700°K.

3 SHELVES

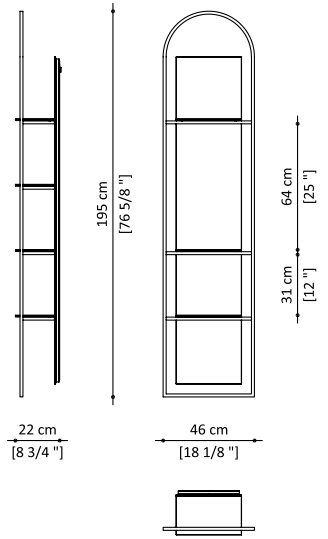

4 SHELVES

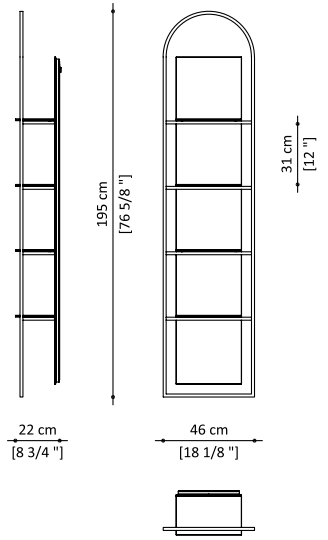

UFFIZIO 3 SHELVES | LIB.UFFI.500 3.700,00 €
Metal frame Bronze Shadow matt finished - 3 Shelves in transparent glass col. Avana
Wall panel made in grey mirrored glass matt with LED light incorporated

UFFIZIO 4 SHELVES | LIB.UFFI.510 3.900,00 €
Metal frame Bronze Shadow matt finished - 4 Shelves in transparent glass col. Avana
Wall panel made in grey mirrored glass matt with LED light incorporated

Moderna e accattivante
libreria luminosa.

Modern and charming backlit
bookcase.

Saggio
Bookcase

DESIGN | ANGELO MICHELI

Finishes of the above picture

Metal Finish
Matt Gold

Wood
Dark oak

Saggio bookcase è il luogo ideale per custodire ed apprezzare la bellezza dei libri che, ordinatamente esposti, rivelano la sensibilità e gusti di chi li possiede.
Saggio Bookcase è realizzata con struttura in mdf impiallacciato in rovere spessorato e bordature dei profili e dello zoccolo laminati in oro opaco. Per dare un effetto di movimento, i montanti verticali sono realizzati in differenti profondità. L'apertura sui fianchi è pantografata secondo un decoro sinuoso che ne spezza il ritmo regolare. Ideale la composizione di più elementi affiancati tra loro.

Saggio Bookcase is ideal to store and showcase neatly arranged books, which reveal the taste and sensitivity of their owner.
The structure is in shimmed oak, while the shelf edges and base are mat gold laminate. The vertical panels have different depths to provide a dynamic effect. The decorative curvy opening on the sides breaks the regularity of the shape. Ideal combined side by side with other elements.

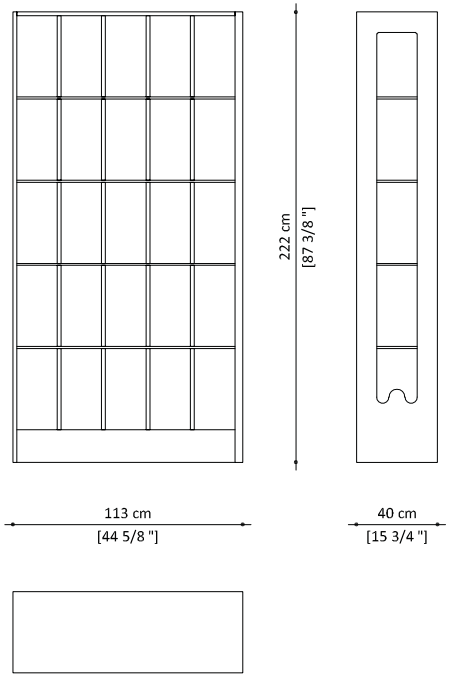

SAGGIO | LIB.SAGG.500
Dark oak wood

6.300,00€

▲

L’apertura sui fianchi è pantografata secondo un decoro sinuoso che ne spezza il ritmo regolare.

The decorative curvy opening on the sides breaks the regularity of the shape.

Socrate
Bookcase

DESIGN | PAOLO CASTELLI

Finishes of the above picture

Metal Finish
Matt Gold

Marble
Rosa Egeo

Transparent
glass col. Avana

Alternative
shelves option

Wood
Elm Grey

Alternative
structure option

Metal Finish
Bronze
Shadow Matt

Socrate Bookcase è realizzata con struttura metallica composta da tubolari a sezione quadrata. La versione in marmo ha la struttura metallica in finitura oro opaco, ripiani realizzati in vetro color avana e marmo Rosa Egeo. La versione in legno ha la struttura metallica in finitura Bronze Shadow opaco, ripiani in vetro Antelio color avana e legno di olmo cenere. Disponibili i modelli Socrate 35 e Socrate 130.

Socrate Bookcase is made with a metal structure composed of square section tubulars. The marble version has a frame mat gold finished, shelves made of Havana-colored glass and Rosa Egeo marble. The wooden version has glass shelves in Havana and ash elm wood, metal frame bronze shadow mat.It is available in two size: Socrate 35 model and Socrate 130 model.

L35

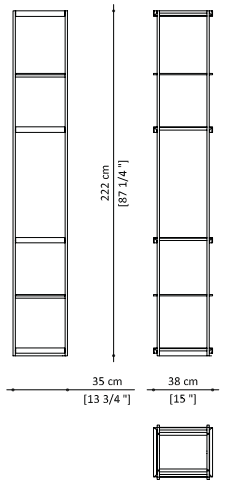

WOOD | LIB.SOCR.521 — 6.300,00 €
Ash elm wood and glass shelves - Transparent glass shelves col. Avana
Metal frame bronze shadow mat finish

MARBLE | LIB.SOCR.520 — 7.900,00 €
Rosa egeo marble and glass shelves
Metal frame mat gold finish

L130

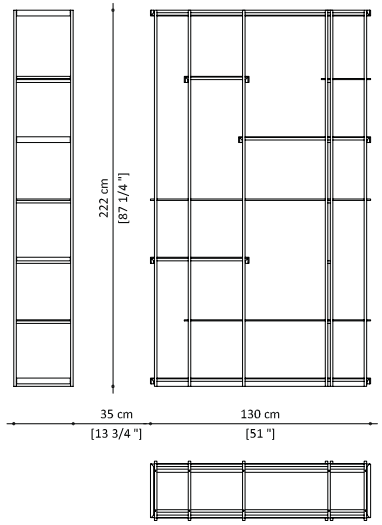

WOOD | LIB.SOCR.511 — 13.200,00 €
Ash elm wood and glass shelves - Transparent glass shelves col. Avana
Metal frame bronze shadow mat finish

MARBLE | LIB.SOCR.510 — 15.500,00 €
Rosa egeo marble and glass shelves
Metal frame mat gold finish

◄ Ripiani polimaterici dalle linee grafiche e leggere.

Multi material shelves designed by light graphic lines.

BDS
Bookcase

DESIGN | BORROMEODESILVA

Finishes of the above picture

Metal Finish
Matt Gold

Wood
Black Ashwood

BDS Bookcase è una raffinata libreria a giorno, dalle geometrie decise e razionali, che bene si sposa con il concetto dell'home office o di un ufficio direzionale. La libreria è composta da montanti intrecciati tra loro in metallo con finitura oro opaco a sezione quadrata, che si incrociano a 45 gradi, formando un particolare disegno a croce. I ripiani e lo zoccolo sono rivestiti in essenza frassino black. Infine, la libreria si correda di 3 cassetti in legno, con la medesima finitura.

Bds Bookcase is an elegant open bookshelf, boasting bold and rational lines, that will complement both home offices and elegant corporate spaces.
The structure comprises twisting elements made in square-section metal with a matt gold finish, which intersect at 45 degrees forming a cross pattern. Shelves and wooden base are covered with black ash veneer. The bookshelf features 3 wood drawers with the same finish.

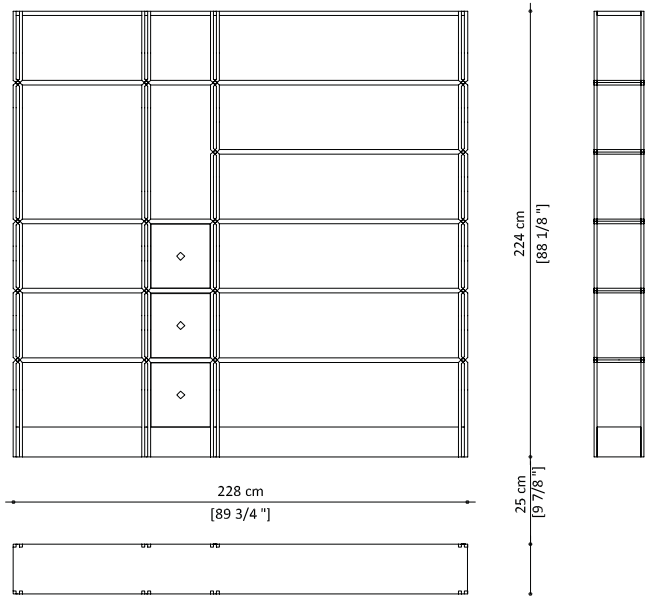

BDS BOOKSHELF | LIB.BDSB.500
Black ash wood
Metal frame mat gold finish

17.600,00€

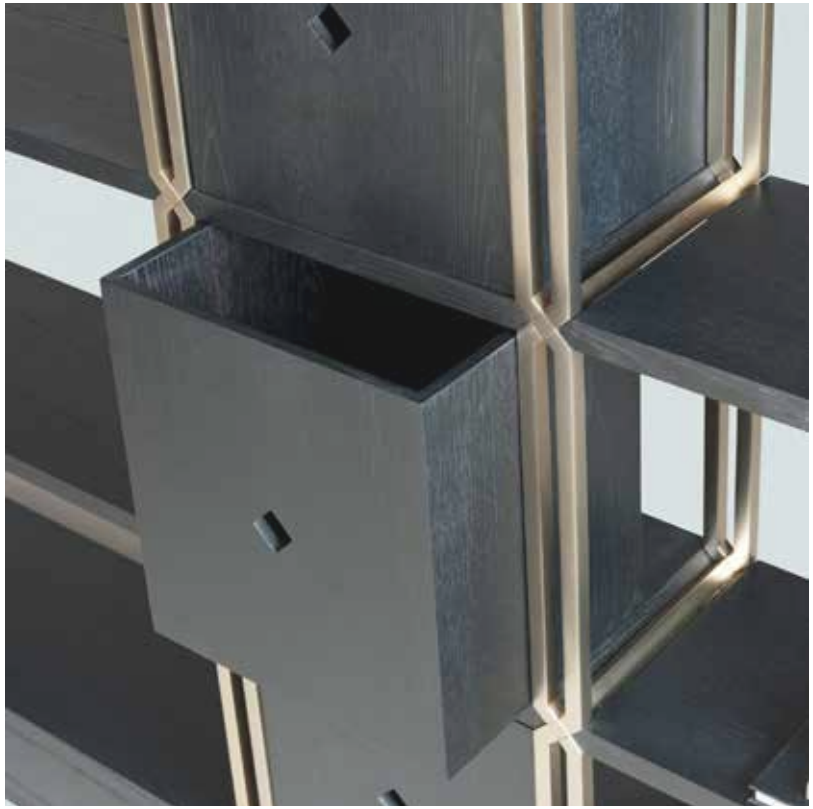

I montanti si incrociano a 45 gradi e formano un particolare disegno a croce.

The metal bars intersect at 45° creating a unique cross design.

For Living
Showcase

DESIGN | PAOLO CASTELLI

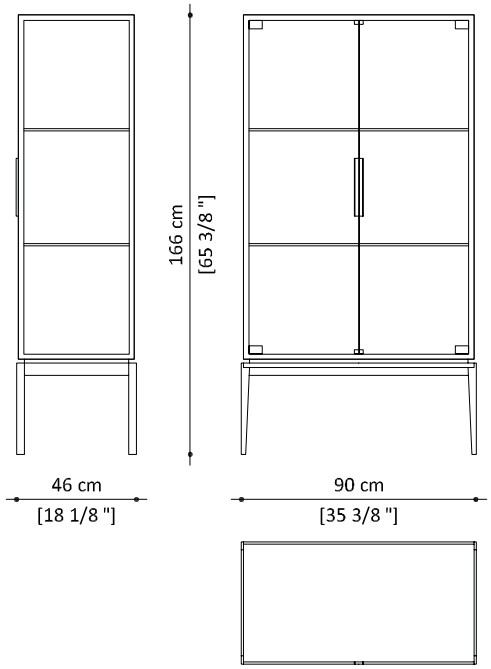

FOR LIVING SHOWCASE | LIB.FORL.600 — 9.700,00 €
Metal brass, extraclear glass

FOR LIVING SHOWCASE LED | LIB.FORL.610 — 11.200,00 €
Metal brass, extraclear glass
Led lighting system

Finishes of the above picture

Metal Finish
Matt Bronzed
Brass

Satinated brass

Extraclear
glass

Un esclusivo armadio rivisto in chiave artistica, dalle preziose rifiniture che richiamano un'orientalità d'antan. La struttura e le due maniglie sono in ottone satinato con vernice trasparente protettiva, il basamento è in metallo finitura bronzo ottone opaco, mentre il vetro è extrachiaro temperato.
Di particolare pregio la versione con LED, con top realizzato con un pannello illuminante a LED che esalta e sottolinea le forme e gli oggetti all'interno.

An exclusive case reviewed in an artistic vision thanks to its precious finishing evoking an ancient Eastern touch.
The structure and two jewels handles are in satinated brass with transparent protective varnish, basement is finished in mat bronzed brass, the glass is extraclear tempered. The precious upper cover is made of a LED light panel that glorifies the shapes and the objects featured in it.

◄ Vetrinetta espositiva con luce led integrata.

Showcase with integrated illumination.

Soft Ratio
Cabinet

DESIGN | PAOLO CASTELLI

Finishes of the above picture

Metal Finish Matt Bronzed Brass

Metal Black Matt varnished

Backlaquered Glass Col. Oasi (Low model)

Bovine Leather Col. 634 Oasi

Cabinets con base in metallo finitura nero opaco con doppi piedini in metallo finitura bronzo ottone opaco. La struttura lignea è rivestita in pelle (ante e fronte) con un pattern geometrico che richiama la struttura. L'interno è laccato in tinta col. NCS4010Y3OR.
Il modello basso è attrezzato con 1 ripiano in vetro extrachiaro, mentre il fondo è in vetro specchiato col. bronzo lucido. Top in vetro retrolaccato lucido in tinta. Apertura touch delle ante con sistema push-pull. Il modello High è disponibile nella versione con 3 ripiani in vetro extrachiaro o nella versione con 2 cassetti imbottiti rivestiti internamente in microfibra in tinta e 1 ripiano in vetro extrachiaro, ed è dotato di illuminazione interna a LED, fondo in vetro specchiato col. bronzo.

Cabinets with metal base matt black finish with double metal feet matt bronzed brass finish. The wooden structure is leather-covered (doors and front part) with a geometric pattern that recalls the structure. The interior is lacquered col. NCS4010Y3OR.
Low cabinet is fitted inside with one extra-clear transparent glass shelf, while the back is made of mirrored bronze glass. Top made in glass backlaquered (same colour). The doors are opened with a push-pull touch system. High model is available inside with 3 shelves in extra clear glass or with 1 shelf in extra clear glass and 2 drawers with internal upholstering covered in microfiber, same colour.LED lighiting, and back in mirrored bronze glass.

LOW

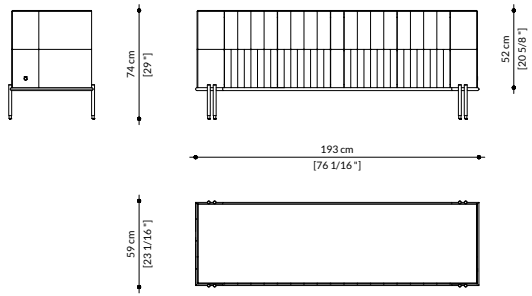

LEATHER | LIB.SOFT.120 13.000,00 €
Metal base matt black finish with double metal feet matt bronzed brass finish
Top in back-lacquered glass. - 1 extraclear glass shelf
Doors and sides covered in leather

HIGH

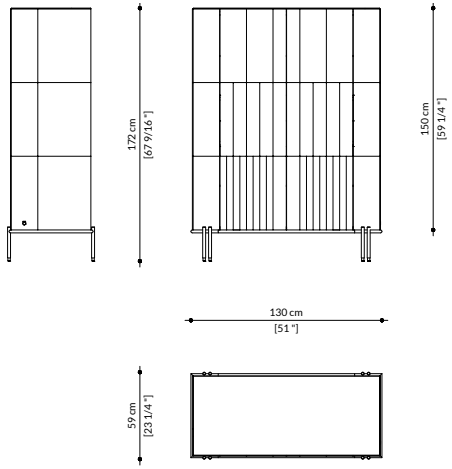

LEATHER SHELVES | LIB.SOFT.113 14.500,00 €
Metal base matt black finish with double metal feet matt bronzed brass finish
Top in MDF matt lacquered col. NCS4010Y3OR. Doors and sides covered in leather. 3 Shelves in extra clear glass.

LEATHER DRAWERS | LIB.SOFT.112 15.500,00 €
Metal base matt black finish with double metal feet matt bronzed brass finish
Top in MDF matt lacquered col. NCS4010Y3OR. Doors and sides covered in leather. 1 Shelf in extra clear glass and 2 drawers.

Black & Gold
Cabinet

DESIGN | LUCA SCACCHETTI

Finishes of the above picture

Metal Finish
Matt Flamed
Brass

Laquering
Black
100 gloss
RAL9005

HIGH - Realizzato in mdf laccato lucido nero 100 gloss e poggia su una base in metallo con finitura in ottone fiammato opaco come le maniglie che completano il disegno del mobile stesso. L'interno in mdf è laccato nero opaco, ed è composto da 2 ripiani e 3 cassetti. Luce led interna.
LOW - Realizzato in mdf laccato lucido nero 100gloss e poggia su una base in metallo pieno con finitura ottone fiammato opaco come le preziose maniglie che arricchiscono il disegno del mobile stesso. L'interno è laccato nero opaco ed è dotato di un ripiano in mdf, con le 4 ante con bordo a 45°.
Entrambe le versioni sono disponibili in col. avorio Ral 1035.

HIGH - Cabinet made from mdf, black with a 100 gloss lacquered finish, and has a metal base in matt flamed brass finishing, as have the handles that complete the cabinet's design.The inside, which is mdf lacquered matt black, black on the doors, features two shelves and three drawers. Led light inside.
LOW - The cabinet is made from mdf, with a black 100 gloss lacquered finish and a metal base finished matt flamed brass, the same as the handles that add aesthetic value to the cabinet's design. The matt black lacquered inside features a mdf shelf, and has 4 doors with a 45° angle edge. Both models are available with white top lacquered 100 gloss ral. 1035.

LOW

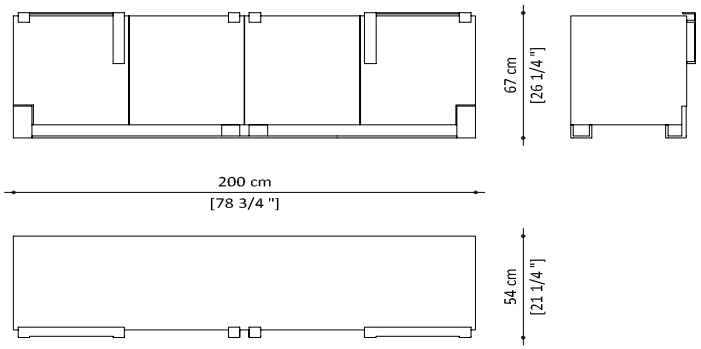

LOW | LIB.BLAC.120 — 13.500,00 €
MDF lacquered 100 gloss
Col. Black Ral 9005 or Ivory Ral 1035
1 shelf made in mdf lacquered matt black

HIGH

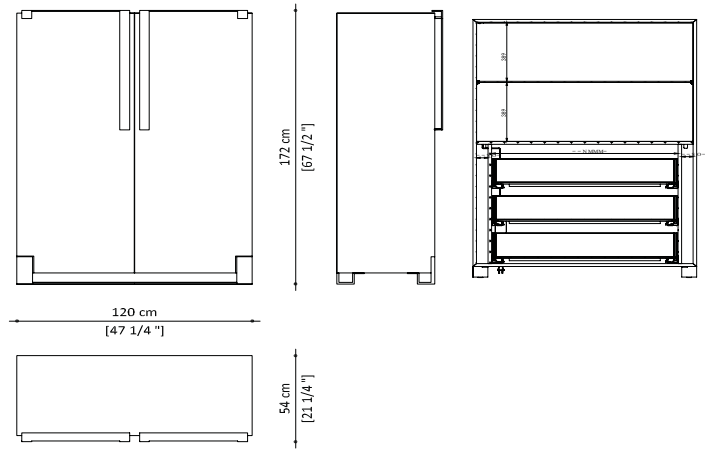

HIGH | LIB.BLAC.110 — 15.800,00 €
MDF lacquered 100 gloss
Col. Black Ral 9005 or Ivory Ral 1035
2 shelves and 2 drawers made in mdf lacquered matt black

Galvanica: prezioso processo di trattamento dell'ottone in grado di conferire allo stesso un'inaspettata tridimensionalità.

Galvanic process: galvanic bath which gives to brass precious three-dimensional effect.

Dromo
Cabinet

DESIGN | VITTORIO PARADISO

Finishes of the above picture

Metal Finish Matt Gold

Saffiano Laquering Bronze

Matt Brass

Wood Dark Oak

Ha una struttura in rovere massello impreziosita da elementi esagonali in ottone naturale satinato.
Il contenitore è realizzato in MDF con laccatura lucida 100 gloss impreziosita da una sfumatura radiale in tinta arricchito da un pattern in saffiano, color bronzo, così come le ante. L'interno, illuminato a luce led, è laccato opaco marrone Ral 8019 con schienale in vetro satinato col. bronzo. Il cabinet alto è attrezzato con un ripiano in mdf laccato opaco, due cassetti imbottiti rivestiti internamente in microfibra, e un ripiano ulteriore in vetro extrachiaro.Il cabinet basso è predisposto con 4 ante e un ripiano in vetro extrachiaro.

It has a solid oak structure embellished with hexagonal elements in natural satin brass. The container is made of MDF with 100 gloss lacquer embellished with a radial shade in the same shade enriched with a pattern in saffiano, bronze color, as well as the doors.
The interior, lit with LED light, is Ral 8019 matt brown lacquered, with back in bronze mirrored glass mat. The high cabinet is equipped with a mat lacquered mdf shelf, 2 drawers with internal upholstering covered in microfiber, and a further shelf in extra-clear glass. Low cabinet has 4 doors and 1 shelf in extraclear glass.

LOW

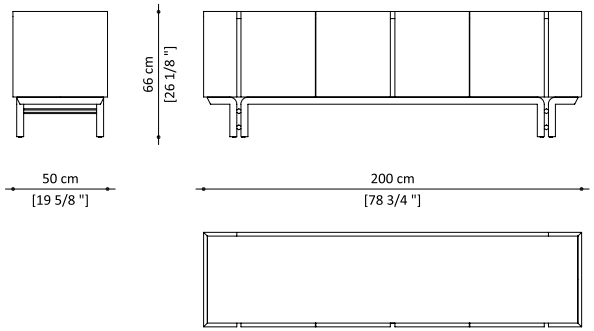

LOW | LIB.DROM.122 — 14.200,00 €
Structure lacquered Saffiano Finish Bronze
Base made in dark oak wood - Brass matt details
1 shelf made in extraclear glass

HIGH

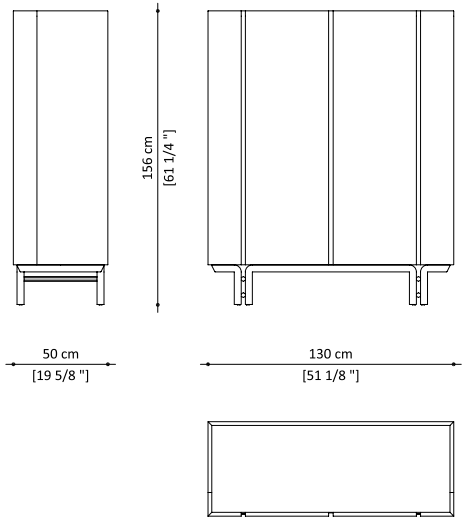

HIGH | LIB.DROM.112 — 18.800,00 €
Structure lacquered Saffiano Finish Bronze
Base made in dark oak wood - Brass matt details
2 drawers in mdf lacquered matt ral 8019 - 1 shelf made in extraclear glass

Pattern Saffiano: decorazione artigianale che riprende le più esclusive lavorazioni tipiche dalle concerie del distretto Toscano.

Saffiano pattern: handcrafted tanning typical of Tuscan district.

For Living
Low Cabinet

DESIGN | PAOLO CASTELLI

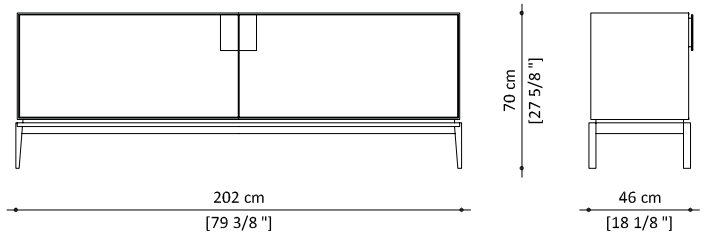

LAQUERED | LIB.FORL.120 — 14.500,00 €
Metal base and handles mat gold finish
Lacquered 100 Gloss in colours: Mat gold, Black Ral 9005,
Brown grey Ncs 5010 Y50r , Brown Ral 8019
1 shelf made in extraclear glass

PEACOCK | LIB.FORL.120P — 15.300,00 €
Metal base and handles in matt bronze shadow finish
Lacquered 100 gloss ncs 5010 Y30R Satined glass front doors
1 shelf made in extraclear glass

CERAMIC HANDLES (OPTIONAL) — 1.100,00 €

Finishes of the above picture

Metal Finish Matt Gold

Laquering Matt Gold

Peacock model

Metal Finish Bronze Shadow Mat

Satin glass Peacock

Alternative colour options

Laquering Black 100 gloss RAL9005

Laquering Grey Brown 100 gloss NCS 5010Y50R

Laquering Brown 100 gloss RAL8019

Laquering Grey Brown 100 gloss NCS 5010Y50R

Optional Ceramic handles

Ceramic Handles

La struttura è realizzata in mdf verniciato lucido 100 gloss oppure oro opaco, con due ante che si muovono a scorrimento con parziale sovrapposizione. Le maniglie e la base sono realizzate in metallo con finitura oro opaco. Ripiano in vetro extrachiaro.
La versione Peacock prevede struttura verniciata 100 gloss in colore Grigio Marrone Ncs 5010 Y50r, ante in vetro satinato con disegno "Pavone", maniglie e base in metallo finitura Bronze shadow.
Su richiesta disponibili su entrambi i modelli maniglie in preziosa ceramica artigianale faentina.

The structure is mdf with a 100 gloss lacquered or matt gold finish and has two partially overlapping sliding doors. The handles and the base are made in metal with mat gold finish. Extraclear glass shelf.
The Peacock version has lacquered structure col. Grey Brown Ncs 5010 Y50r , satin glass doors with a "Pavone" design, handles and structure are made in metal - finish bronze shadow.
On both models as optional precious artesan Faentine ceramic handles.

◄ Su richiesta maniglie decorate con ceramica artigianale faentina.

On request available with handcrafted handles in Faenza ceramic.

For Living
High Cabinet

DESIGN | PAOLO CASTELLI

Finishes of the above picture

Metal Finish Matt Gold

Laquering Grey Brown 100 gloss NCS 5010Y50R

Bovine Leather Col. 638 Light Grey

Alternative colour options

Laquering Brown 100 gloss RAL8019

Peacock model

Metal Finish Bronze Shadow Mat

Satin glass Peacock

Laquering Grey Brown 100 gloss NCS 5010Y50R

Optional Ceramic handles

Ceramic Handles

La struttura in mdf è laccata lucida 100 gloss, mentre la base in metallo è trattata con finitura oro opaco come le due maniglie. Le ante esternamente sono rivestite in pelle bovina pieno fiore in tinta e rifinite con una cornice laccata lucida 100 gloss. L'interno si presenta laccato opaco in tinta, con schiena rivestita in vetro specchiato satinato col. bronzo e organizzato con opportuni 4 ripiani in cristallo extrachiaro oppure 3 cassetti, 1 ripiano verniciato lucido 100 gloss e 1 ripiano in cristallo. Luce led interna.La versione Peacock prevede ante in vetro satinato con disegno "Pavone", maniglie e struttura in metallo finitura Bronze shadow, o su richiesta in ceramica finitura "Bronze shadow".

The mdf high cabinet, with a 100 gloss lacquered finish, has a metal base with a matt gold finish, the same as its two handles. The outside of the doors is covered in fine leather of the same colour and finished with a frame with a 100 gloss lacquered finish. Inside it is lacquered matt in the same colour, with the back covered in bronze mirrored glass mat with 4 extracrystal shelves, or with 3 drawers, 1 shelf painted 100 gloss, and 1 crystal shelf.Led internal light. The Peacock version includes satin glass doors with a "Pavone" design, handles and tructure made in metal - finish bronze shadow or in ceramic "Bronze shadow" finish (optional).

HIGH SHELVES

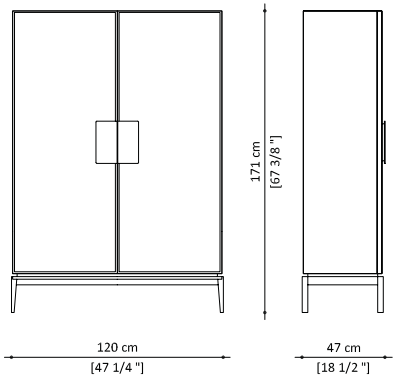

LEATHER | LIB.FORL.110 — 15.400,00 €
Metal base and handles mat gold finish
Lacquered 100 Gloss in colours: Brown grey Ncs 5010 Y50r , Brown Ral 8019
Doors covered in leather - 4 shelves made in extraclear glass

PEACOCK | LIB.FORL.110P — 16.500,00 €
Metal base and handles in matt bronze shadow finish
Lacquered 100 gloss ncs 5010 Y30R Satined glass front doors
4 shelves made in extraclear glass

HIGH SHELVES & DRAWERS

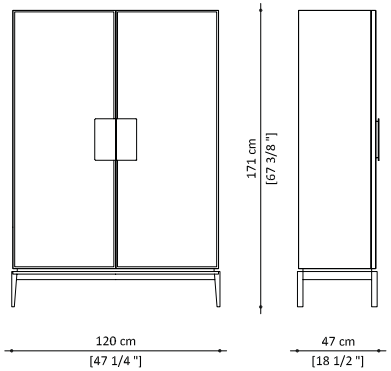

LEATHER | LIB.FORL.111 — 15.800,00 €
Metal base and handles mat gold finish
Lacquered 100 Gloss in colours: Brown grey Ncs 5010 Y50r , Brown Ral 8019
Doors covered in leather - 1 shelf made in extraclear glass and 3 lacquered drawers

PEACOCK | LIB.FORL.111P — 16.900,00 €
Metal base and handles in matt bronze shadow finish
Lacquered 100 gloss ncs 5010 Y30R Satined glass front doors
1 shelf made in extraclear glass and 3 lacquered drawers

CERAMIC HANDLES (OPTIONAL) — 1.100,00 €

◄ Ante in vetro satinato con disegno “Pavone”

Satin glass doors with a “Pavone” design

For Living
Cocktail

DESIGN | PAOLO CASTELLI

Finishes of the above picture

Metal Finish Matt Gold

Laquering Brown 100 gloss RAL8019

Leather Galuchat effect

Peacock model (doors)

Satin glass Peacock

For Living Cocktail Cabinet è allestito internamente con 2 ripiani in cristallo extrachiaro, spessore 8mm e due cassetti con fronte rivestito in pelle effetto galuchat ed interno in morbida microfibra. Base in metallo con ripiano finitura oro opaco, vano contenitore accato lucido 100 gloss colore marrone RAL 8019 internamente ed esternamente. Le ante sono attrezzate con 6 alloggiamenti in ottone e rivestite esternamente in pelle effetto galuchat, mentre il fondo è in vetro specchiato satinato col. bronzo. All'interno è presente un'illuminazione LED a spegnimento automatico con la chiusura della ante. La versione speciale Peacock prevede ante in vetro satinato con disegno "Pavone". Portata massima per ciascuna anta: 5 kg.

For Living Cocktail Cabinet contains extra clear lead 2 glass crystal shelves 8mm thick and two drawers covered in fine bovine leather printed with galuchat texture, upholstered inside with smooth microfiber. It features a mat gold finish base holding a cabinet made of 100 gloss lacquered mdf color brown RAL 8019, both inside and outside. The shutters are upholstered in fine bovine leather printed with galuchat texture, with 6 inner containers made in brass, while the back is available in bronze mirrored glass mat. Led internal light. The Peacock special edition includes satin glass doors with a "Pavone" design. Maximum load for each door: 5 kg.

COCKTAIL

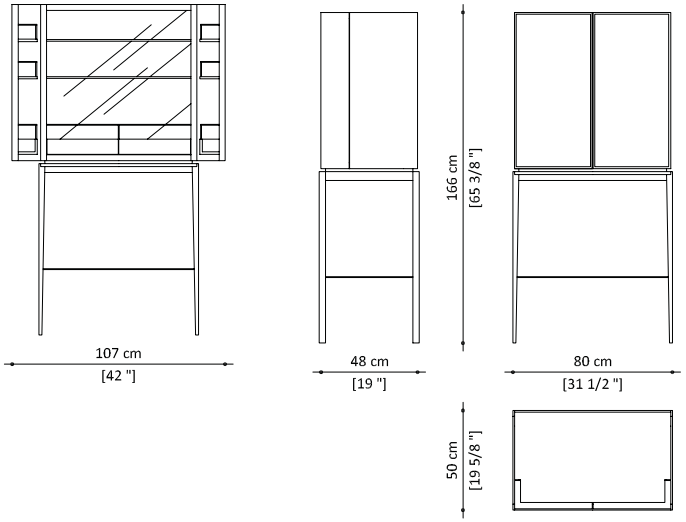

LACQUERED | LIB.FORL.710 — 16.900,00 €
Metal base mat gold finish
Lacquered 100 Gloss Brown Ral 8019 - Doors covered in leather with galuchat texture

PEACOCK | LIB.FORL.710P — 17.600,00 €
Metal base mat gold finish
Lacquered 100 Gloss Brown Ral 8019 - Doors covered in satined glass front doors

For Living
Tall Cabinet

DESIGN | PAOLO CASTELLI

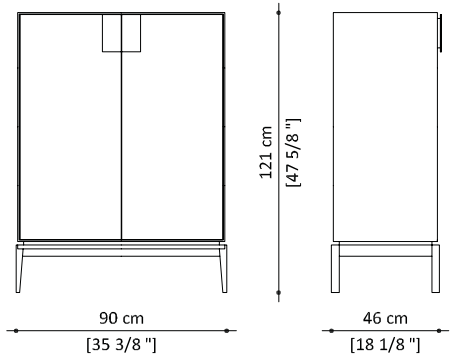

Finishes of the above picture

Metal Finish
Matt Gold

Laquering
Grey Brown
100 Gloss
NCS 5010Y50R

Optional
Ceramic Handles
Riflessi

Alternative colour options

Laquering
Black
100 gloss
RAL9005

Laquering
Brown
100 gloss
RAL8019

Ispirato ai mobili bar degli anni '50, questo mobile arreda con classe leganti zone giorno. La struttura è realizzata in mdf laccato lucido 100 gloss, mentre la base in metallo è realizzata con finitura oro opaco. Le maniglie sono realizzate in metallo con finitura oro opaco oppure su richiesta ceramica artigianale faentina a riflessi con effetto cangiante. L'interno si presenta laccato opaco in tinta con schiena rivestita in vetro specchiato satinato col. bronzo e organizzato con due ripiani in cristallo extrachiaro temperato.

Inspired by the bar cabinets of the 1950s, this item brings style to elegant living spaces. The mdf structure has a 100 gloss lacquered finish and a metal base with matt gold finish.The handles, are made in metal with mat gold finish or artisanal ceramic from Faenza, with iridescent effect. Inside it is lacquered matt in the same color, with the back covered in bronze mirrored glass mat. featuring two extraclear crystal shelves.

TALL | LIB.FORL.130 — 12.300,00 €
MDF Lacquered 100 gloss with metal handles mat gold finish
Available colours: Black Ral 9005, Grey Brown Ncs 5010 Y50r, Brown Ral 8019
2 shelves made in extraclear glass

CERAMIC HANDLES (OPTIONAL) — 1.100,00 €

Fine Collection

220

DESIGN | PAOLO CASTELLI

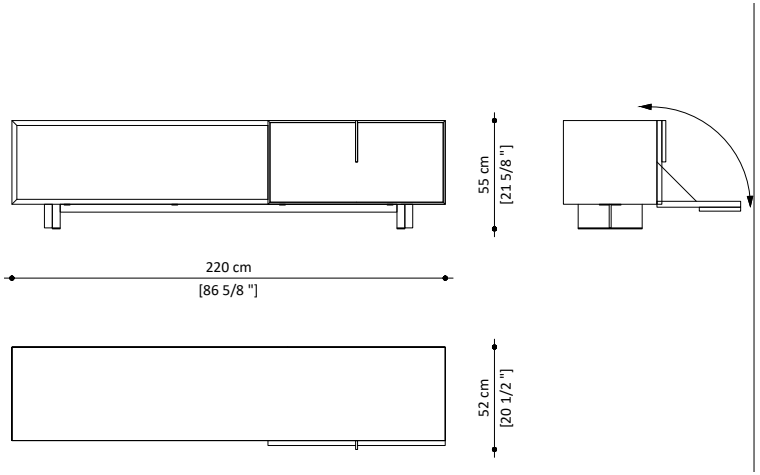

220 | LIB.FINE.110 — 10.100,00 €
Makassar frame - mat gold feets and handles
Brown lacquered details 100 gloss Ral 8019
Flap door covered in dark brown leather col. 602

Finishes of the above picture

Metal Finish
Matt Gold

Wood
Ebony
Macassar

Bovine Leather
Col. 602
Dark Brown

Il Fine Collection Cabinet 220 è un mobile contenitore basso a giorno con ribalta laterale, ha una linea pulita ed elegante, ed è realizzato con una combinazione di diversi materiali preziosi, ideale per arredare eleganti ambienti living. Il mobile è realizzato in finitura ebano macassar e l'anta a ribalta è esternamente rivestita in pelle bovina color testa di moro con bordatura laccata lucida marrone scuro Ral 8019 - 100 gloss. La maniglia è in metallo con finitura oro opaco spazzolato a mano. All'interno, l'anta a ribalta è laccata lucida marrone scuro 100 gloss e piedi in ebano hanno un inserto in metallo con finitura oro opaco.

Fine Collection Cabinet 220 is an open-fronted low cabinet with lateral flap door, boasting clean elegant lines, made with a combination of different precious materials, ideal in all elegant living spaces.The cabinet is made of fine macassar ebony finish; the flap door is entirely covered with dark brown leather on the front, with a dark brown 100 gloss lacquered finish around the edges (Ral 8019). The metal handle has a matt gold finish, brushed by hand. Inside, the flap door is dark brown with a 100 gloss lacquered finish and ebony legs with a metal insert with a matt gold finish.

Fine Collection

180B

DESIGN | PAOLO CASTELLI

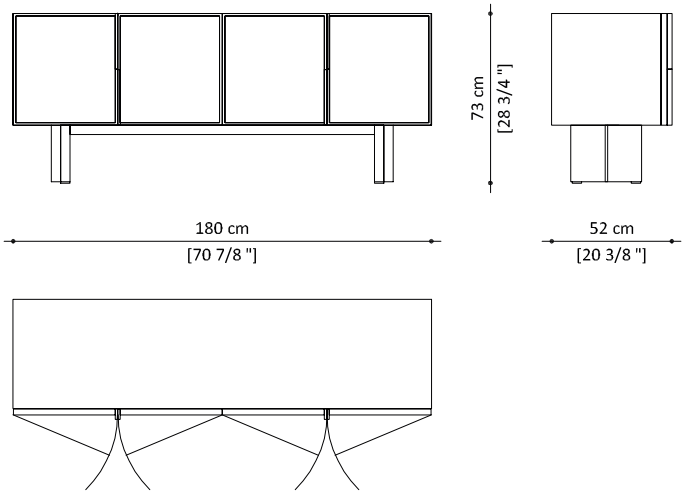

180B | LIB.FINE.120 — 11.200,00 €

Makassar frame - mat gold feets and handles
Brown lacquered details 100 gloss Ral 8019
Doors covered in dark brown leather col. 602
1 shelf made in extraclear glass

Finishes of the above picture

Metal Finish
Matt Gold

Wood
Ebony
Macassar

Bovine Leather
Col. 602
Dark Brown

Fine Collection Cabinet 180 B è un mobile contenitore basso dalle linee pulite, realizzato con una combinazione di diversi materiali preziosi che creano una proposta estetica unica, adatto ad arredare eleganti ambienti living e dining.
Il mobile è realizzato in finitura ebano macassar, con 4 ante esternamente rivestite in pelle bovina color testa di moro e bordatura laccata lucida marrone scuro Ral 8019 - 100 gloss. Le maniglie sono realizzate in metallo con finitura oro opaco spazzolato a mano. L'interno, sempre in ebano macassar è dotato di un ripiano in vetro extrachiaro temperato mentre le ante sono laccate color marrone lucido 100 gloss. Infine, i piedini, anch'essi in ebano macassar, presentano un elegante inserto in metallo con finitura oro opaco.

Fine Collection Cabinet 180 B is a low cabinet with clean, regular lines, made using a combination of different precious materials, a unique piece that will complement all elegant living or dining spaces. The cabinet is made of fine macassar ebony finish, with 4 doors entirely covered with dark brown leather with a dark brown 100 gloss lacquered finish (Ral 8019) around the edges. The metal handles have a matt gold finish, brushed by hand. The inside is also macassar ebony and features a tempered extra-clear glass shelf, while the doors have a dark brown 100 gloss lacquered finish. The legs, also macassar ebony, have a metal insert with mat gold finish.

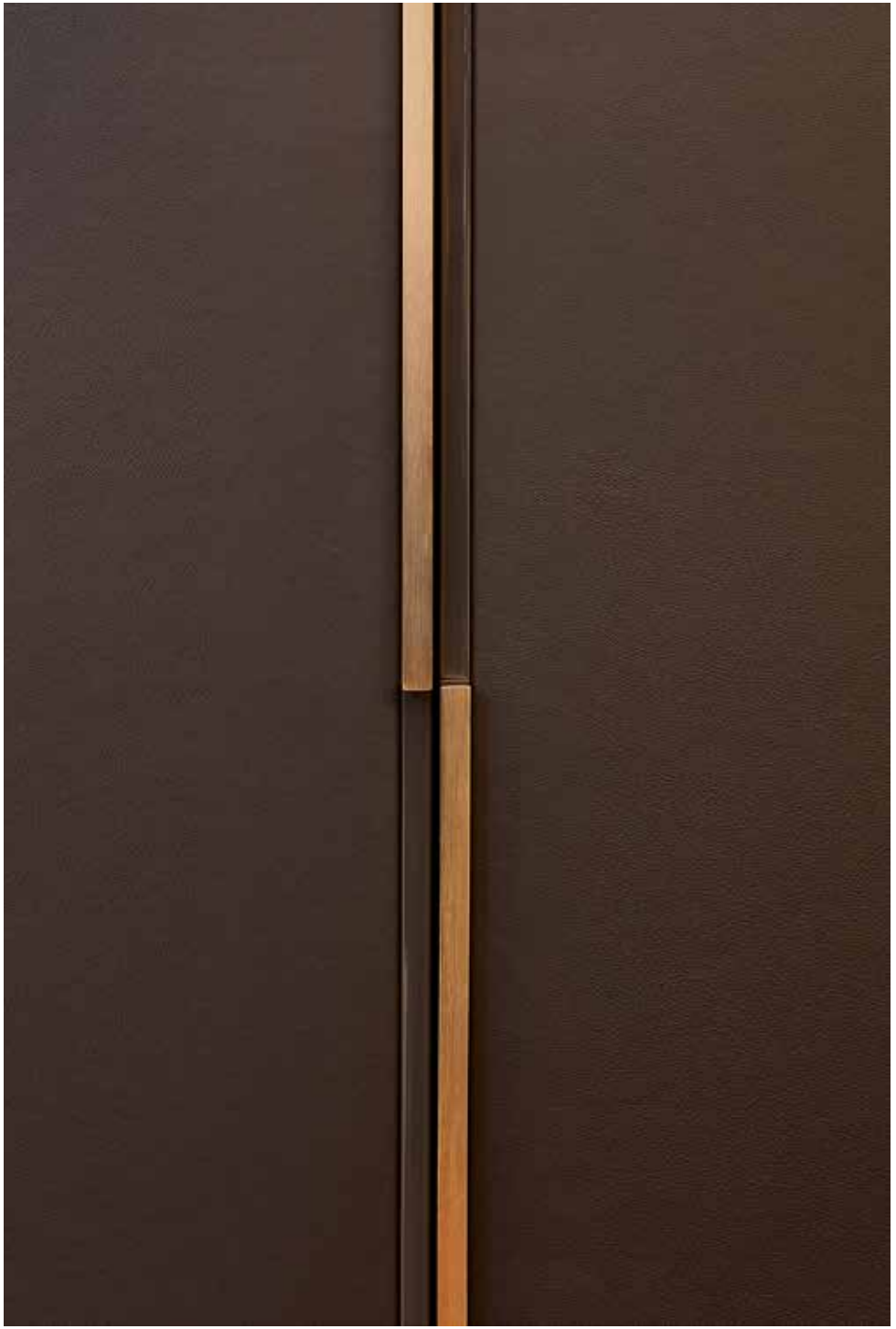

Fine Collection

180A

DESIGN | PAOLO CASTELLI

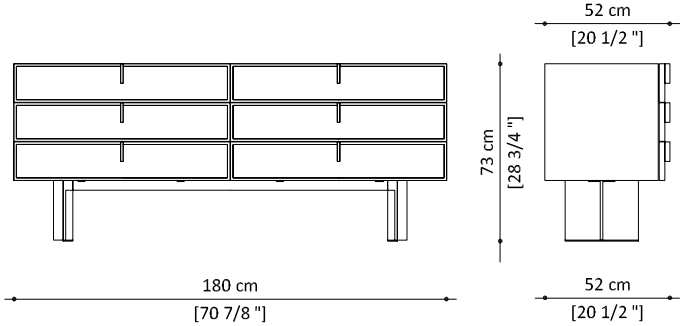

180A | LIB.FINE.130 13.300,00 €
Mat gold details and handles
Lacquered 100 gloss. Available colours: Ivory Ral 1013, Grey Brown Ncs 5010 Y50r
Drawers front covering in leather (same colour)
Inner covering in microfiber (same colour)

Finishes of the above picture

Metal Finish Matt Gold

Laquering Grey Brown 100 Gloss NCS 5010Y50R

Bovine Leather Col. 638 Light Grey

Alternative colour options

Laquering Ivory 100 gloss RAL1013

Bovine Leather Col. 633 Vanilla

Fine Collection Cabinet 180 A è un elegante cassettone, ideale per ambienti notte e guardaroba. Il mobile è realizzato in mdf laccato lucido 100 gloss con 6 cassetti, il cui fronte è rivestito in pelle bovina in tinta e con bordi laccati lucidi. Le maniglie sono in metallo con preziosa finitura oro opaco satinato. L'interno dei cassetti è in mdf laccato opaco e con fondo leggermente imbottito e rivestito in elegante microfibra col. taupe. I piedi sono sempre in mdf laccato lucido 100 gloss con elegante inserto in metallo che riprende la pregiata lavorazione delle maniglie.

Elegant chest of drawers, ideal in any bedroom or wardrobe area. Made in mdf 100 gloss lacquered finish, it features 6 drawers, frontally covered in leather same colour, with glossy lacquered edges. The metal handles have a matt gold finish. The drawers, matt lacquered mdf inside, have a lightly padded bottom, covered with elegant microfibre col. taupe. The legs are also MDF 100 gloss lacquered finish and have metal inserts recalling the finish of the handles.

Fine Collection

Chest Of Drawers

DESIGN | PAOLO CASTELLI

Finishes of the above picture

Metal Finish
Matt Gold

Laquering
Ivory
100 gloss
RAL1013

Bovine
Leather
Col. 633
Vanilla

Alternative colour options

Laquering
Grey
Brown
NCS
5010Y50R

Bovine
Leather
Col. 638
Light Grey

CHEST OF DRAWERS 3 - Il mobile è realizzato in mdf laccato lucido 100 gloss con 3 cassetti, il cui fronte è rivestito in pelle bovina in tinta e con bordi laccati lucidi. Le maniglie sono in metallo con preziosa finitura oro opaco satinato. L'interno dei cassetti è in mdf laccato opaco e con fondo leggermente imbottito e rivestito in elegante microfibra in tinta col. taupe. I piedi sono sempre in mdf laccato lucido 100 gloss con elegante inserto in metallo finitura oro opaco.

CHEST OF DRAWERS 7 - Il mobile è realizzato in mdf laccato lucido 100 gloss con 7 cassetti, il cui fronte è rivestito in pelle bovina in tinta e con bordi laccati. Le maniglie sono in metallo con preziosa finitura oro opaco satinato. L'interno dei cassetti è in mdf laccato opaco e con fondo leggermente imbottito e rivestito in elegante microfibrain tinta col. taupe. Zoccolo in laminato metallico color oro.

CHEST OF DRAWERS 3 - Made in mdf with a 100 gloss lacquered finish, it features 3 drawers, frontally covered leather of the same colour, with glossy lacquered edges. The metal handles have a galvanic matt gold finish. The drawers, matt lacquered mdf inside, have a lightly padded bottom, covered with elegant microfiber col. taupe. The legs are also with a 100 gloss lacquered finish and have metal inserts in mat gold finish.

CHEST OF DRAWERS 7 - Made in mdf, with a 100 gloss lacquered finish, it features 7 drawers, frontally covered leather of the same colour, with glossy ivory lacquered edges. The metal handles have a matt gold finish. The drawers, matt lacquered mdf inside, have a lightly padded bottom, covered with elegant microfibre col. taupe. Its laminated metal base is colored gold.

3 DRAWERS

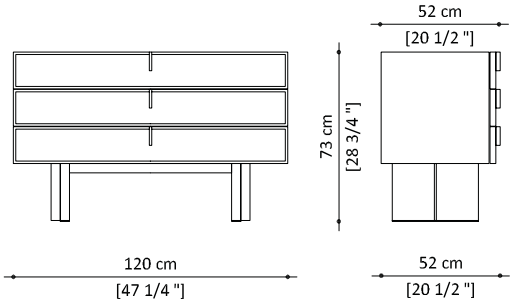

3 DRAWERS | LIB.FINE.410 9.000,00 €
Mat gold details and handles
Lacquered 100 gloss. Available colours: Ivory Ral 1013, Grey Brown Ncs 5010 Y50r
Drawers front covering in leather (same colour)
Inner covering in microfiber (same colour)

7 DRAWERS

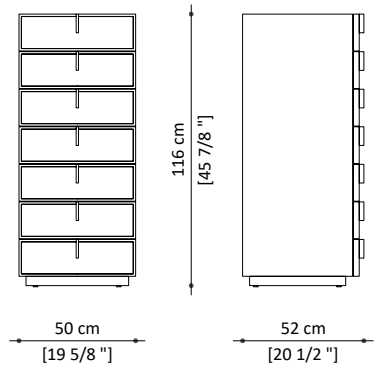

7 DRAWERS | LIB.FINE.420 9.000,00 €
Mat gold details and handles
Lacquered 100 gloss. Available colours: Ivory Ral 1013, Grey Brown Ncs 5010 Y50r
Drawers front covering in leather (same colour)
Inner covering in microfiber (same colour)

Fine Collection

Bedside Table

DESIGN | PAOLO CASTELLI

Finishes of the above picture

Metal Finish
Matt Gold

Laquering
Grey Brown
100 gloss
NCS
5010Y50R

Bovine
Leather
Col. 638
Light Grey

Alternative colour options

Laquering
Ivory
100 gloss
RAL1013

Bovine
Leather
Col. 633
Vanilla

Comodino dalla linea elegante e pulita.
Il mobile è realizzato in mdf laccato lucido 100 gloss con 2 o 3 cassetti, il cui fronte è rivestito in pelle bovina in tinta e con bordi laccati lucidi. Le maniglie sono in metallo con preziosa finitura oro opaco satinato. L'interno dei cassetti è in mdf laccato opaco e con fondo leggermente imbottito e rivestito in elegante microfibra col. taupe. Zoccolo in laminato metallico color oro.

Bedside table boasting elegant, clean lines. Made in mdf with a 100 gloss lacquered finish, it features 2 or 3 drawers, frontally covered with leather of the same colour, with glossy lacquered edges. The metal handles have a matt gold finish. The drawers, matt lacquered mdf inside, have a lightly padded bottom, covered with elegant microfiber col. taupe. Its laminated metal base is golden.

2 DRAWERS

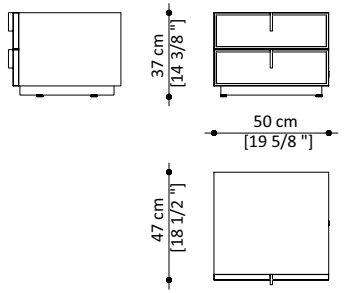

2 DRAWERS | LIB.FINE.210 3.990,00 €
Mat gold details and handles
Lacquered 100 gloss. Available colours: Ivory Ral 1013, Grey Brown Ncs 5010 Y50r
Drawers front covering in leather (same colour)
Inner covering in microfiber (same colour)

3 DRAWERS

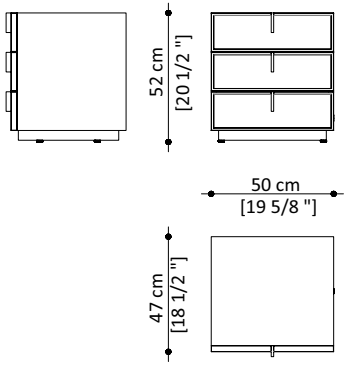

3 DRAWERS | LIB.FINE.220 4.450,00 €
Mat gold details and handles
Lacquered 100 gloss. Available colours: Ivory Ral 1013, Grey Brown Ncs 5010 Y50r
Drawers front covering in leather (same colour)
Inner covering in microfiber (same colour)

Dea

Night Storage

DESIGN | VITTORIO PARADISO

Finishes of the above picture

Wood
Eucalyptus

Bronze
Mirrored Glass Matt

Bovine Leather
Col. 638 Light Grey

Il sistema di contenitori notte Dea ha forme morbide, plasmate dall'armoniosa alternanza di linee convesse, del fronte e del retro, e concave, dei fianchi.
I contenitori sono realizzati con una particolarissima essenza di eucalipto frisé: la superficie del legno è increspata naturalmente per l'azione nel tempo delle raffiche di vento sugli alberi. Il top è in specchio bronzo satinato mentre i fianchi sono rivestiti in pregiati pellami con bordatura di chiusura (sopra e sotto) in metallo oro satinato opaco.

The Dea night storage system has soft shapes, formed by the harmonious alternation of lines that are convex on the front and the back, and concave on the sides.
The containers are made with a very special essence of eucalyptus frisé: the surface of the wood is naturally rippled by the action of the gusts of wind on the trees over time. The top is in satin finish bronze mirror while the sides are covered in fine leathers with closing edge banding (above and below) in matt satin gold metal.

BEDSIDE TABLE 3 DRAWERS

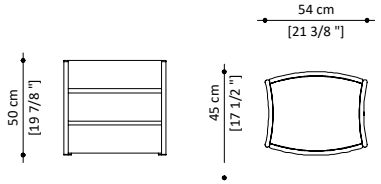

EUCALYPTUS | LIB.DEAC.223 — 5.600,00 €
Eucalyptus frisé wood structure
Bronze mirrored top satin finished
Sides covered with bovine leather

CHEST OF DRAWERS 3

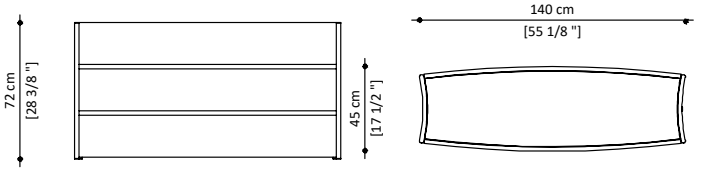

EUCALYPTUS | LIB.DEAC.410 — 7.900,00 €
Eucalyptus frisé wood structure
Bronze mirrored top satin finished
Sides covered with bovine leather

CHEST OF DRAWERS 7

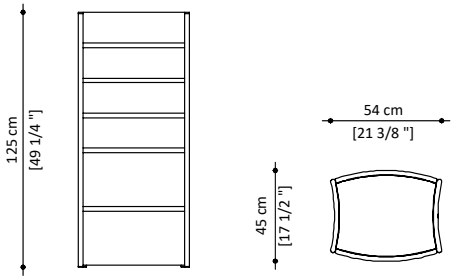

EUCALYPTUS | | LIB.DEAC.420 — 10.300,00 €
Eucalyptus frisé wood structure
Bronze mirrored top satin finished
Sides covered with bovine leather

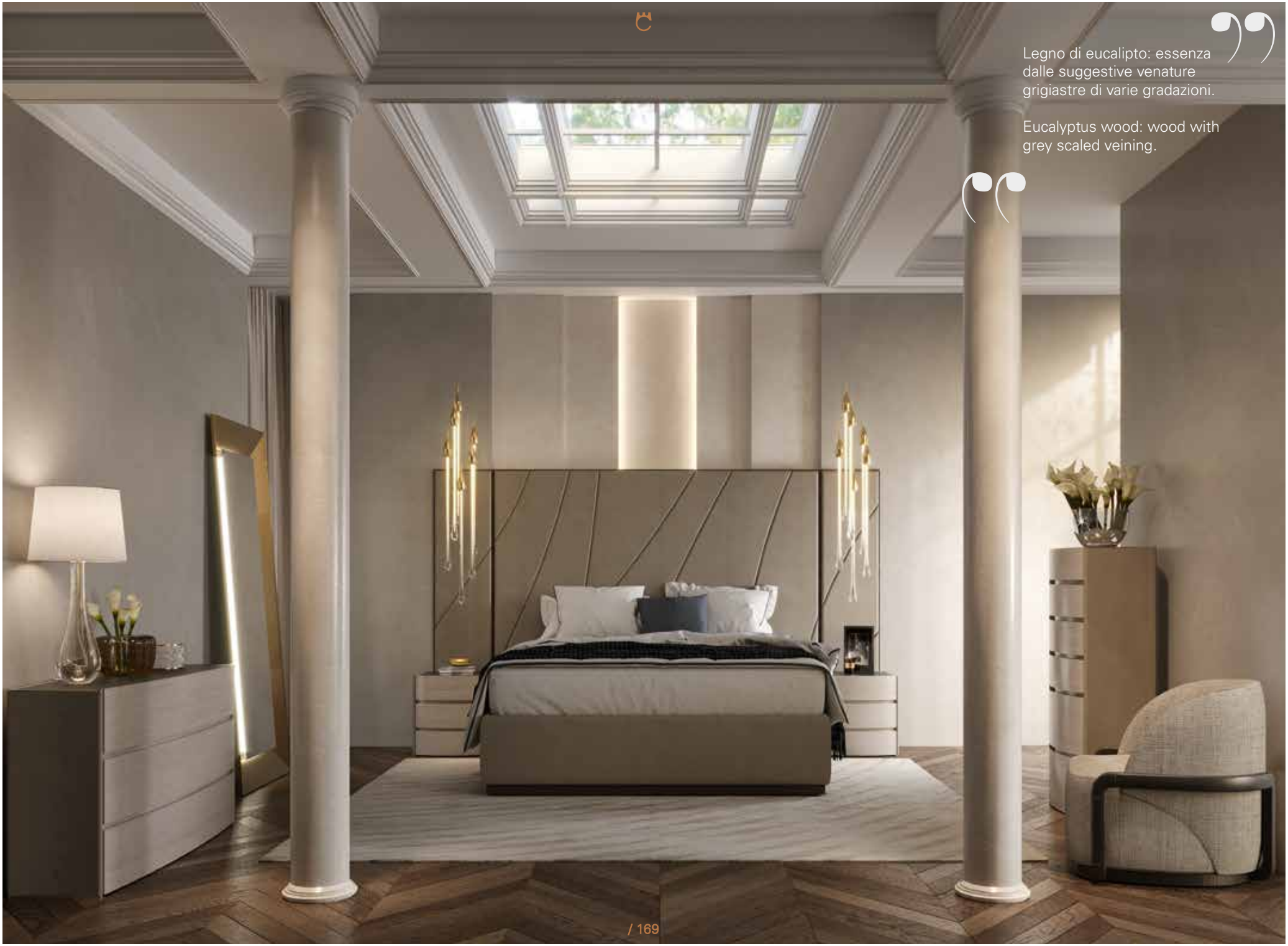

Legno di eucalipto: essenza dalle suggestive venature grigiastre di varie gradazioni.

Eucalyptus wood: wood with grey scaled veining.

Inspiration

Fine furniture and lighting

PAOLO CASTELLI

Letti
Beds

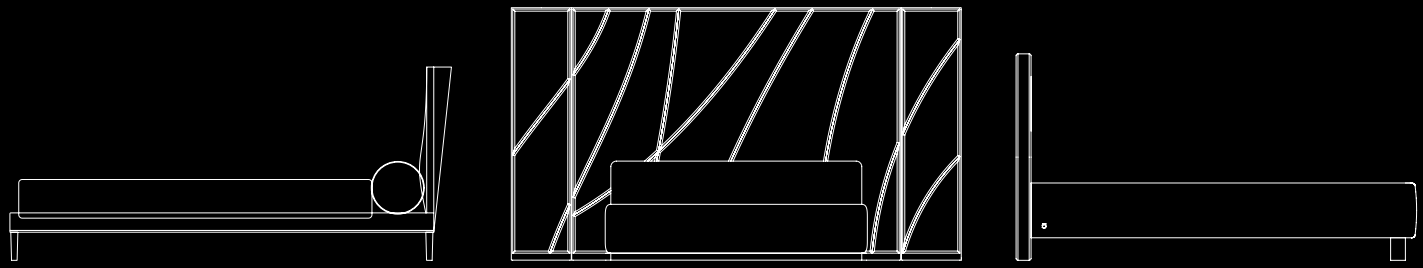

Stripes
Bed

DESIGN | PAOLO CASTELLI

Finishes of the above picture

Metal Finish
Matt Gold

Fabric
Velvet Mana
Col. 0477 Grey

Grande linearità ed equilibrio dei volumi per il letto Stripes. Testata imbottita e rivestita in tessuto a fasce verticali di diverse dimensioni, bordatura perimetrale in tinta oppure su richiesta in metallo finitura oro satinato. Il giroletto è sostenuto da piedini in tubolare ellittico con finitura oro satinato opaco. Per il suo carattere neutro ma sofisticato, Stripes può essere inserito sia in ambienti di impronta minimale che in spazi maggiormente connotati sotto il profilo decorativo. Rete e materasso non inclusi. Dimensione materasso 180 x 200 cm.

The Stripes bed projects great linearity and balance of volumes. Its padded headboard is upholstered in fabric with vertical bands of different sizes and features a coordinated fabric edging, or alternative metallic perimeter edging in satin finish gold (optional). The bed frame is supported by elliptical tubular feet with a matt satin gold finish. Due to its neutral but sophisticated character, Stripes is equally at home in both minimalist environments and more ornately decorated rooms. Matress and bedspring not included - Matress Size: 180x200 cm.

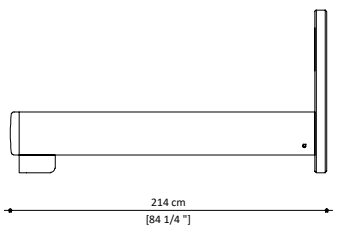

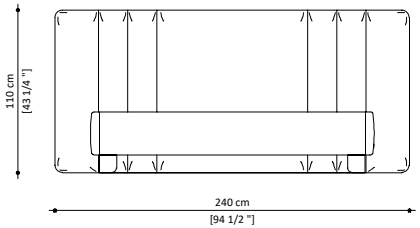

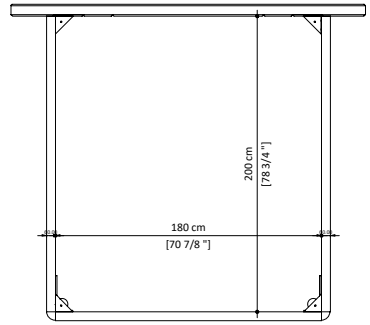

STRIPES WITHOUT METAL | NOT.STRI.110.ECO Satin gold finished feet Eco-Friendly Leather	7.380,00€
STRIPES WITHOUT METAL | NOT.STRI.110.SUP Satin gold finished feet Fabric Superior, Velvet or Sateen	8.050,00€
STRIPES WITHOUT METAL | NOT.STRI.110.PEL Satin gold finished feet Leather	9.865,00€
STRIPES WITHOUT METAL | NOT.STRI.110.NAB Satin gold finished feet NabukNabuk	11.570,00€
STRIPES | NOT.STRI.100.ECO Satin gold finished perimeter edging Eco-Friendly Leather	8.500,00€
STRIPES | NOT.STRI.100.SUP Satin gold finished perimeter edging Fabric Superior, Velvet or Sateen	9.500,00€
STRIPES | NOT.STRI.100.PEL Satin gold finished perimeter edging Leather	10.900,00€
STRIPES | NOT.STRI.100.NAB Satin gold finished perimeter edging Nabuk	12.500,00€

Odissea

High Metal

DESIGN | VITTORIO PARADISO

Finishes of the above picture

Metal Finish
Matt Gold

Laquering
Grey
Brown

Bovine Leather
Col. 638 Light
Grey

La testata (con pannelli laterali mobili) è interamente rivestita in tessuto raso e risulta essere particolarmente morbida grazie all'imbottitura, che le conferisce un aspetto accogliente e confortevole. Gli inserti metallici con finitura oro accendono di riflessi ambrati i nostri sogni. Grazie alla sofistica scelta cromatica Odissea Bed può essere inserito sia in ambienti di impronta minimale che in spazi maggiormente decorativi. Dimensioni materasso: 180 x 200 cm. Rete e materasso non inclusi.

The bedhead -composed with movable side panels-, wholly covered in satin fabric, is particularly soft due to an upholstery that lends it a welcoming and comfortable aspect. The metal inserts with golden finish light up our dreams with amber reflections. Thanks to a sophisticated chromatic choice, Odissea Bed is suited to both minimalist environments and more highly decorative spaces. Matress and bedspring not included.
Matress Size: 180x200 cm.

H 181

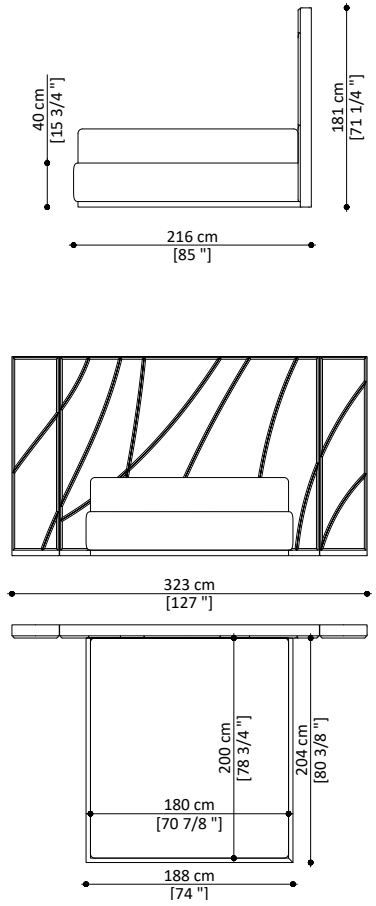

METAL SATEEN FABRIC | NOT.ODIS.100.SUP — 15.400,00€
Metal Frame mat gold finish - Movable side panels
Fabric Sateen

METAL LEATHER | NOT.ODIS.100.PEL — 19.000,00€
Metal Frame mat gold finish - Movable side panels
Bovine Leather

METAL NABUCK | NOT.ODIS.100.NAB — 21.000,00€
Metal Frame mat gold finish - Movable side panels
Nabuk

Odissea

Low Wood

DESIGN | PAOLO CASTELLI

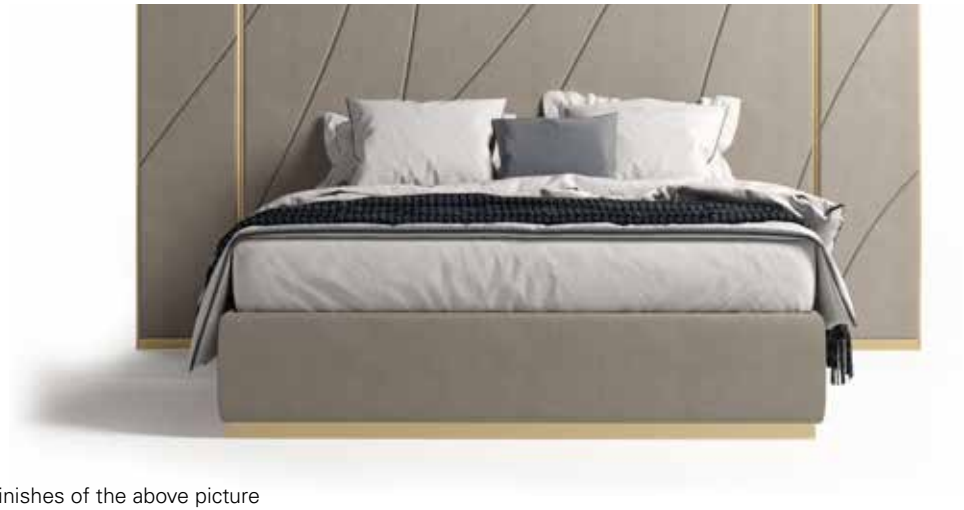

Finishes of the above picture

Wood varnished
Matt Gold

Laquering
Grey
Brown

Bovine Leather
Col. 638 Light
Grey

La testata fissa e interamente rivestita in tessuto raso risulta essere particolarmente morbida grazie all'imbottitura, che le conferisce un aspetto accogliente e confortevole. Gli inserti in legno con finitura oro accendono di riflessi ambrati i nostri sogni. Grazie alla sofistica scelta cromatica Odissea Bed può essere inserito sia in ambienti di impronta minimale che in spazi maggiormente decorativi. Dimensioni materasso: 180 x 200 cm . Rete e materasso non inclusi.

The fixed bedhead, wholly covered in satin fabric, is particularly soft due to an upholstery that lends it a welcoming and comfortable aspect. The wooden inserts with golden finish light up our dreams with amber reflections. Thanks to a sophisticated chromatic choice, Odissea Bed is suited to both minimalist environments and more highly decorative spaces. Matress and bedspring not included - Matress Size: 180x200 cm.

H 140

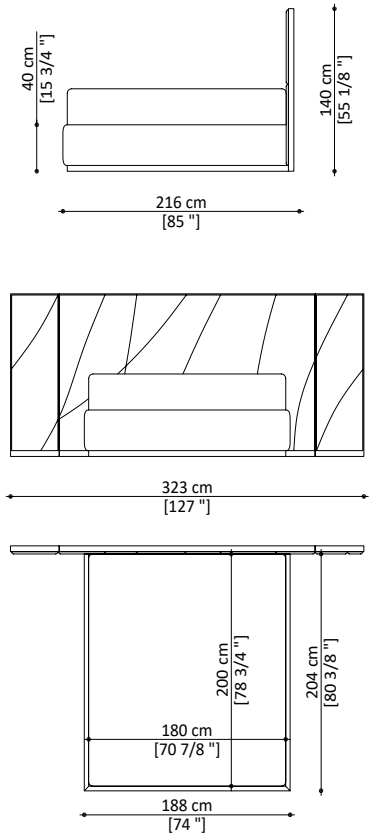

WOOD ECOLEATHER | NOT.ODIS.110.ECO — 9.000,00€
Wooden fixed frame mat gold finish - Fixed headboard
Ecoleather

WOOD SATEEN FABRIC | NOT.ODIS.110.SUP — 9.800,00€
Wooden fixed frame mat gold finish - Fixed headboard
Fabric Sateen

WOOD LEATHER | NOT.ODIS.110.PEL — 11.800,00€
Wooden fixed frame mat gold finish - Fixed headboard
Leather

WOOD NABUCK | NOT.ODIS.110.NAB — 13.800,00€
Wooden fixed frame mat gold finish - Fixed headboard
Nabuk

Testata imbottita, morbida e accogliente.

Soft and comfortable padded headboard.

George
Bed

DESIGN | PAOLO CASTELLI

Finishes of the above picture

Metal Finish
Matt Gold

Nabuck
Col. 02 Dark Brown

La struttura è realizzata in legno e rivestita in pregiato nabuk dai toni color cioccolato, con un profilo metallico con finitura oro opaco satinato a decorare tutto il giro-letto. I piedini, dalla forma caratteristica, sono rivestiti in nabuk in abbinamento alla struttura.
La testata, rivestita in nabuk, è completata da due profili metallici laterali con finitura oro opaco.
Nel profilo della testata sono innestate due punti luce da lettura a Led.
Rete e materasso non inclusi. Dimensione materasso 180 x 200 cm.

The wooden structure is covered with fine nubuck chocolate-timber tones, with a metallic profile in mat gold finish aimed to decorate the whole base. The feet, with their characteristic shape, are covered in nubuck combined with the structure.
The head covered in nubuck is completed by two side metallic profiles with a precious mat gold finish. In the head profile two LED reading lights are inserted.
Mattress ad support not included.
Mattress size 180 x 200 cm.

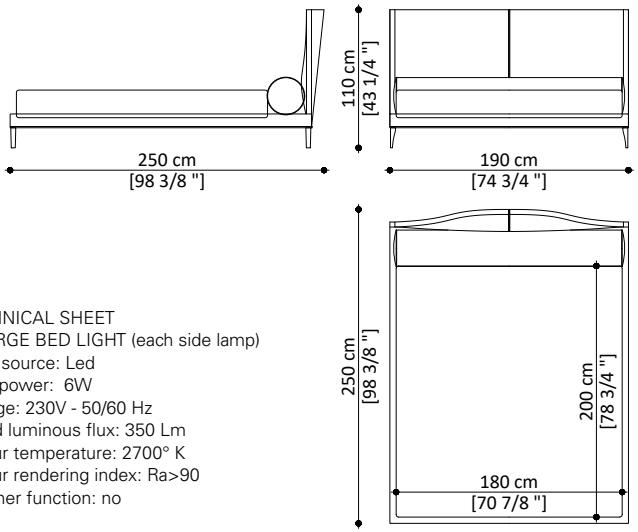

TECHNICAL SHEET
GEORGE BED LIGHT (each side lamp)
Light source: Led
Total power: 6W
Voltage: 230V - 50/60 Hz
Rated luminous flux: 350 Lm
Colour temperature: 2700° K
Colour rendering index: Ra>90
Dimmer function: no

ECOLEATHER | NOT.GEOR.100.ECO Mat gold frame and details Eco-Friendly Leather	12.500,00€
VELVET SUPERIOR | NOT.GEOR.100.SUP Mat gold frame and details Fabric Velvet Superior	13.700,00€
LEATHER | NOT.GEOR.100.PEL Mat gold frame and details Leather	15.500,00€
NABUK | NOT.GEOR.100.NAB Mat gold frame and details Nabuk	16.900,00€

◄ Testata con punti luci luce integrati.

Headboard with integrated spot lights.

Regency
Bed

DESIGN | PAOLO CASTELLI

Finishes of the above picture

Wood Painted
Matt Gold

Fabric Sateen
Col. 6031531
Cream

Un letto importante e dalle linee ispirate allo stile Regency inglese dei primi anni del XIX Secolo, adatto a camere padronali ed eleganti suite.
Regency Bed è un letto matrimoniale imbottito caratterizzato da una grande testata in legno finitura oro opaco imbottita con una pregiata lavorazione a disegno spinato, rivestita in eleganti tessuti, pregiate pelli e morbidi nabuk. Il giro letto, che è diviso in due parti, ha una struttura in legno, imbottito e rivestito in coordinato alla testata. Il letto poggia su uno zoccolo in mdf verniciato oro opaco in tinta con la cornice della testata. Disponibili due dimensioni di testata.
Rete e materasso non inclusi. Dimensione materasso 180 x 200 cm.

An elegant bed inspired by the British Regency style of the early 19th Century, ideal for master bedrooms and elegant suites.
Regency Bed is a double bed, defined by a large padded wood mat gold varnished headboard with an elegant and precious spiked design, covered in elegant fabrics, fine leather and soft nubuck.
The wooden structure padded and upholstered in the same material as the headboard. The bed is positioned on a mdf base painted matt gold, coordinated with the headboard frame. The headboard is available in two different sizes.
Mattress ad support not included. Mattress size 180 x 200 cm.

L242

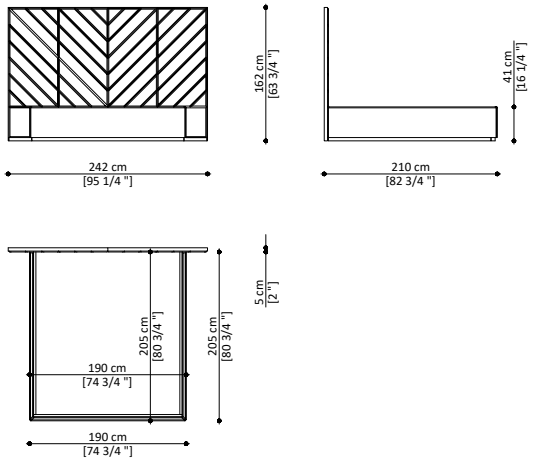

ECOLEATHER | NOT.REGE.110.ECO Eco-Friendly Leather	7.900,00€
SATEEN SUPERIOR | NOT.REGE.110.SUP Fabric Sateen	8.500,00€
LEATHER | NOT.REGE.110.PEL Leather	11.000,00€
NABUK | NOT.REGE.110.NAB Nabuk	13.500,00€

L362

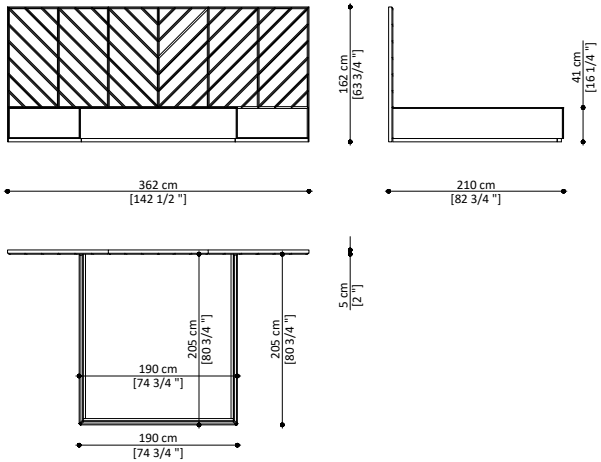

ECOLEATHER | NOT.REGE.120.ECO Eco-Friendly Leather	9.000,00€
SATEEN SUPERIOR | NOT.REGE.120.SUP Fabric Sateen	9.800,00€
LEATHER | NOT.REGE.120.PEL Leather	12.900,00€
NABUK | NOT.REGE.120.NAB Nabuk	14.900,00€

Inspiration

Fine furniture and lighting

PAOLO CASTELLI

Complementi
Complements

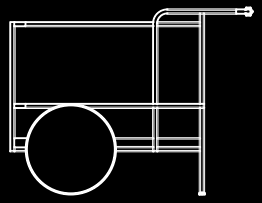
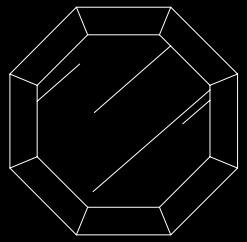
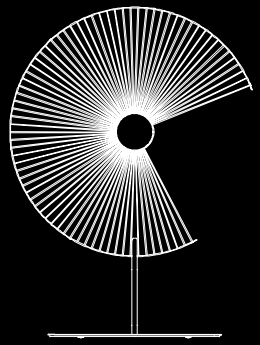
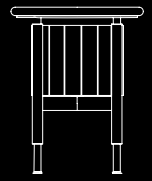
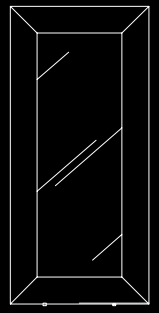

Flare

Screen

DESIGN | VITTORIO PARADISO

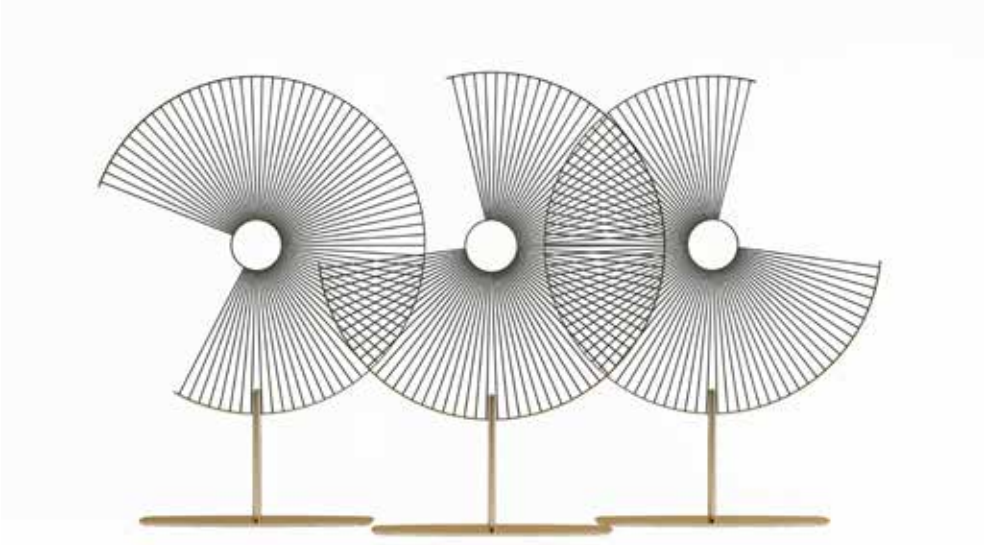

Finishes of the above picture

Metal Finish
Matt Gold

Metal Painting
Black

Paravento scultura raffinato ed elegante. Flare è un complemento d'arredo versatile capace di creare divertenti illusioni ottiche. Ha una struttura portante in metallo oro opaco satinato e corpo decorativo centrale con tubi radiali in alluminio brunito. La base è dotata di ruote a sfera per consentire lo spostamento. È possibile modulare l'altezza del paravento e il posizionamento dell'elemento decorativo in 3 inclinazioni diverse. Un oggetto unico di design da riscoprire in tutta la sua delicata bellezza e il suo millenario fascino.

Sophisticated and elegant sculpture screen. Flare is a versatile piece of furniture that can create amazing optical illusions. It has an opaque satinized gold metal load-bearing structure and a decorative central body made of burnished aluminium radial pipes. The base is equipped with ball wheels to allow movement. It is possible to adapt the screen height and put the decorative element in three different inclines. A unique piece of design to be rediscovered in its delicate beauty and everlasting charm.

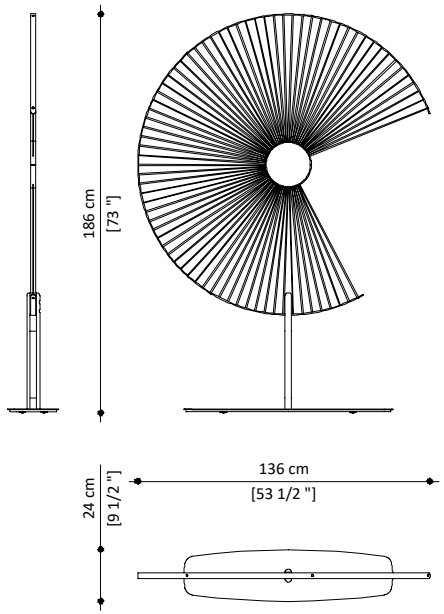

FLARE | COM.FLARE.300
Metal load-bearing structure

4.200,00 €

◄ Inclinazione modulabile del pannello decorativo.

Adjustable decorative panel.

Anodine
Screen

DESIGN | PAOLO CASTELLI

Finishes of the above picture

Metal Finish Matt Bronzed Brass

Metal Painting Black Matt

Polished Brass

Metal Finish Matt Gold

Scultura/paravento, questo elemento impreziosisce la linea di demarcazione tra gli ambienti del vivere contemporaneo.
Il paravento ha una cornice in metallo finitura bronzo ottone opaco, steli in metallo in finitura nero opaco e in ottone lucido. Nelle aste in ottone sono inseriti elementi decorativi a forma di foglia, realizzati in metallo con finitura oro opaco, realizzati artigianalmente. Disponibile la versione a 3 o 5 moduli.

Statuesque screen that enriches the frontier among the contemporary living spaces.
The screen has an opaque brass bronze finish metal frame, metal stems black matt finished and polished brass. In the brass temples there are decorative elements in the shape of a leaf, made of metal with a matte gold finish, handcrafted. Available with 3 or 5 modules.

3 PANELS

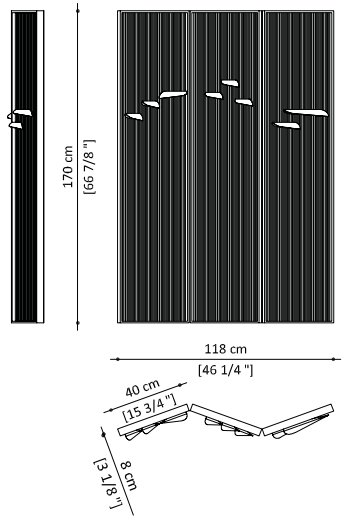

3 PANELS | COM.ANOD.310 6.237,00 €
Mat gold decorative leaves
Polished brass and black matt stems
Metal frame in mat bronzed brass finish

5 PANELS

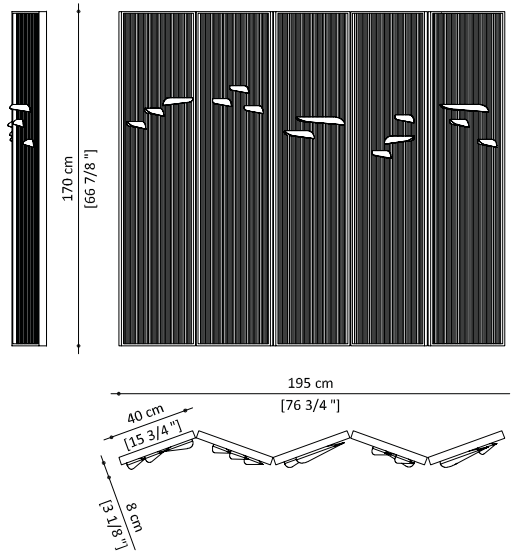

5 PANELS | COM.ANOD.320 9.640,00 €
Mat gold decorative leaves
Polished brass and black matt stems
Metal frame in mat bronzed brass finish

◄ Foglie realizzate asimmetricamente a mano da esperti artigiani.

Handcrafted asymmetrical metal leaves .

Convivier
Trolley

DESIGN | PAOLO CASTELLI

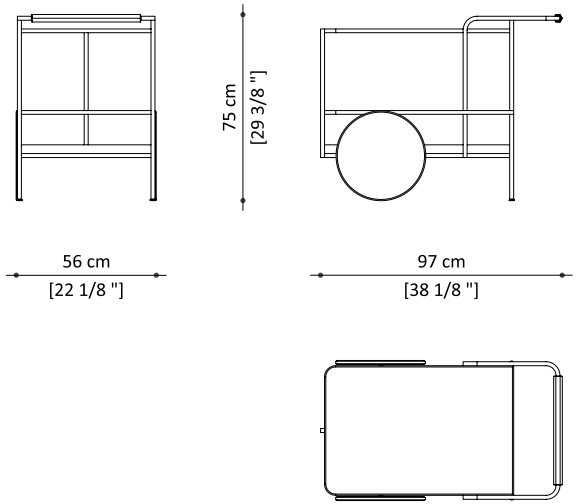

CONVIVIER TROLLEY | COM.TTRO.CON.100 6.690,00€
Bronze shadow matt strutcture
Shelf made in transparent glass col. Avana and bronze mirrored glass matt
Details in twisted nabuk col. 15 taupe.

Finishes of the above picture

Metal Finish Bronze Shadow Mat

Nabuk twisted Col. 15 Taupe

Transparent glass col. Avana

Bronze Mirro-red Glass Matt

Carrello utilizzabile come mobile bar e tavolino. La struttura è in metallo con finitura bronze shadow opaco, il ripiano superiore è in vetro trasparente col. avana e quello inferiore è in vetro specchiato satinato col. bronzo. Le ruote sono rivestite in nabuck con pattern ad intrecci, colore 15 taupe, come la maniglia.

Can be used as a mobile bar or side table, or kept in the office at home to add a touch of style to the everyday.
The structure is in mat bronze shadow metal, shelf is in transparent glass col. Avana and bronzed satin mirror. Handles and wheels are covered in twisted nabuk col. 15 taupe.

◄ Dettagli rivestiti in nabuk con stampa a motivo intrecciato.

Details covered in nubuck twist effect.

Maputo

Cache-pot

DESIGN | SAMUELE MAZZA

A B C

Finishes of the above picture

Natural Stone Col. White (mod. A - B)

Metal Finish Bronze Shadow Matt (mod. A - B)

Limestone Col. Natural (mod. C)

La potenza della pietra naturale limestone (colori bianco per i modelli A e B, o naturale per il modello C) esalta il verde del fogliame, in questa serie di vasi dalla struttura metallica impreziosita dalla finitura bronzo shadow opaco.

The power of limestone natural stone (in white color for A and B mode, and natural color for C model) highlights the green of the foliage in this series of metal structure vases enriched with matt shadow bronze finish.

A

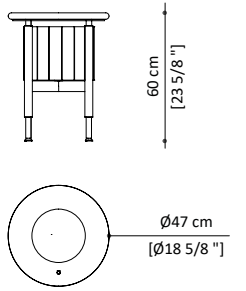

A | COM.VASE.MAP.001 — 3.750,00€
Natural stone vase - Metal frame finished bronze shadow matt
Available colors: white

B

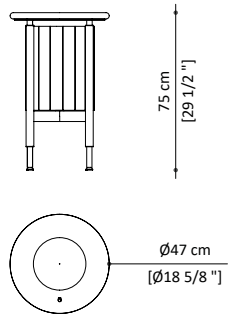

B | COM.VASE.MAP.002 — 4.100,00€
Natural stone vase - Metal frame finished bronze shadow matt
Available colors: white

C

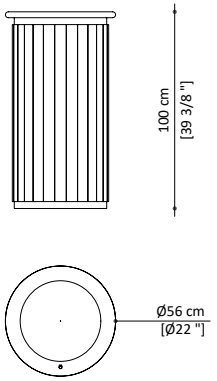

C | COM.VASE.MAP.003 — 2.850,00€
Natural stone vase
Available colors: natural

Accra

Cache-pot

DESIGN | SAMUELE MAZZA

A B

Finishes of the above picture

Lecce Stone

Metal Finish Bronze Shadow Matt

Nabuk twisted Col. 15 Taupe

Imponenti cachepot disponibili in due dimensioni. La struttura in metallo bronzo shadow opaco è rivestita in pelle nabuk con intreccio col. 15 taupe e sorregge il vaso in pietra leccese.

Imposing cachepots available in two sizes. The structure in matt shadow bronze metal is faced with interwoven nubuck cod.15 taupe hide and supports the vase in Lecce stone.

A

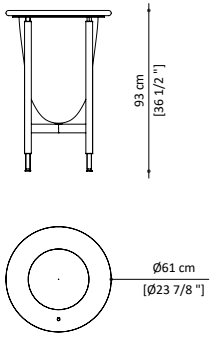

A | COM.VASE.ACC.001 3.969,00 €
Metal frame bronze shadow matt
Vase in Lecce stone col.beige
Details in twisted nabuk col. 15 taupe

B

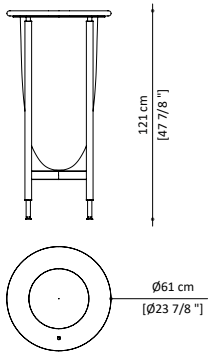

B | COM.VASE.ACC.002 5.330,00 €
Metal frame bronze shadow matt
Vase in Lecce stone col.beige
Details in twisted nabuk col. 15 taupe.

Best World
Octagonal

DESIGN | PAOLO CASTELLI

Finishes of the above picture

Metal Finish
Matt Gold

La collezione Best World apre la serie di specchi luminosi di varie forme e dimensioni adatti a molti tipi di ambienti, come eleganti camere padronali, ingressi e diversi ambienti della casa. Best World è composto da un grande specchio di diverse dimensioni con raffinata cornice in metallo arricchita dalla preziosa finitura oro opaco satinato. Ogni pezzo della collezione è dotato, lungo tutto il perimetro, di un moderno sistema illuminante a led che trasforma l'oggetto in una lampada d'atmosfera, riducendo ulteriori fonti luminose nell'ambiente.

The Best World collection opens the range of luminous mirrors, available in different shapes and dimensions, that can suit a number of different spaces, such as elegant master bedrooms, entrances and other rooms of the house. Best World comprises a large mirror with an exquisite metal frame, boasting an elegant matt gold finish.Each piece of the collection features, along the edge, a modern led lighting system that transforms the mirror into a lamp, creating an atmosphere and reducing other luminous sources in the room.

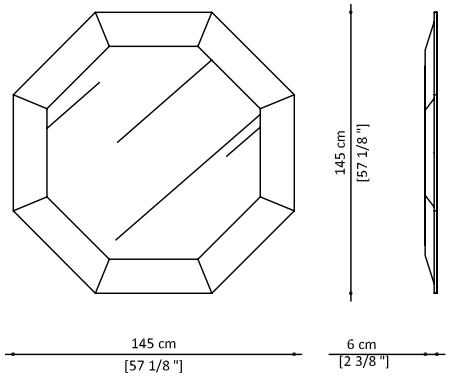

TECHNICAL SHEET
BEST WORLD OCTAGONAL
Light source: Strip Led 12V/24W
Total power: 20W
Voltage: 220 - 240 V
Rated luminous flux:260 Lm
Colour temperature: 2700° K
Colour rendering index: Ra>80
Dimmer function: no
Cable lenght: 2 mt
Pin power cable: EU pin
Weight: Kg 80
Package size: 160 x 160 x 40 cm
Package weight: Kg 140

OCTAGONAL | ILL.BEST.530 — 5.560,00€
Mat gold metal frame with led lighting

◄ Specchi in metallo luminosi che decorano l’ambiente e creano atmosfera.

Metal mirrors with light, which decorate and enrich the ambiences.

Best World
Rectangular

DESIGN | PAOLO CASTELLI

Finishes of the above picture

Metal Finish
Matt Gold

La collezione Best World apre la serie di specchi luminosi di varie forme e dimensioni adatti a molti tipi di ambienti, come eleganti camere padronali, ingressi e diversi ambienti della casa. Best World è composto da un grande specchio di diverse dimensioni con raffinata cornice in metallo arricchita dalla preziosa finitura oro opaco satinato. Ogni pezzo della collezione è dotato, lungo tutto il perimetro, di un moderno sistema illuminante a led che trasforma l'oggetto in una lampada d'atmosfera, riducendo ulteriori fonti luminose nell'ambiente.

The Best World collection opens the range of luminous mirrors, available in different shapes and dimensions, that can suit a number of different spaces, such as elegant master bedrooms, entrances and other rooms of the house. Best World comprises a large mirror with an exquisite metal frame, boasting an elegant matt gold finish.Each piece of the collection features, along the edge, a modern led lighting system that transforms the mirror into a lamp, creating an atmosphere and reducing other luminous sources in the room.

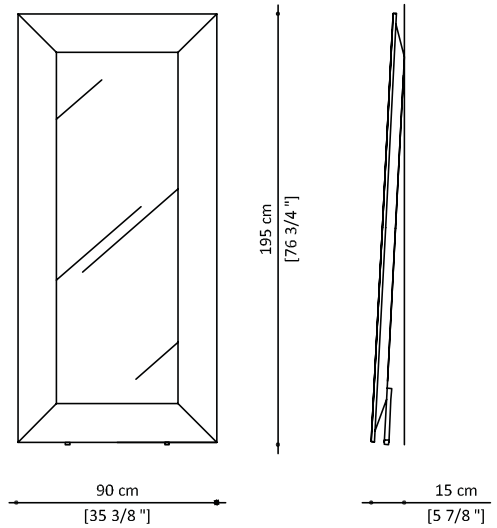

TECHNICAL SHEET
BEST WORLD RECTANGULAR
Light source: Strip Led 12V/24W
Total power: 20W
Voltage: 220 - 240 V
Rated luminous flux:260 Lm
Colour temperature: 2700° K
Colour rendering index: Ra>80
Dimmer function: no
Cable lenght: 2 mt
Pin power cable: EU pin
Weight: Kg 80
Package size: 210 x 104 x 40 cm
Package weight: Kg 130

RECTANGULAR | ILL.BEST.510 — 6.237,00€
Mat gold metal frame with led lighting

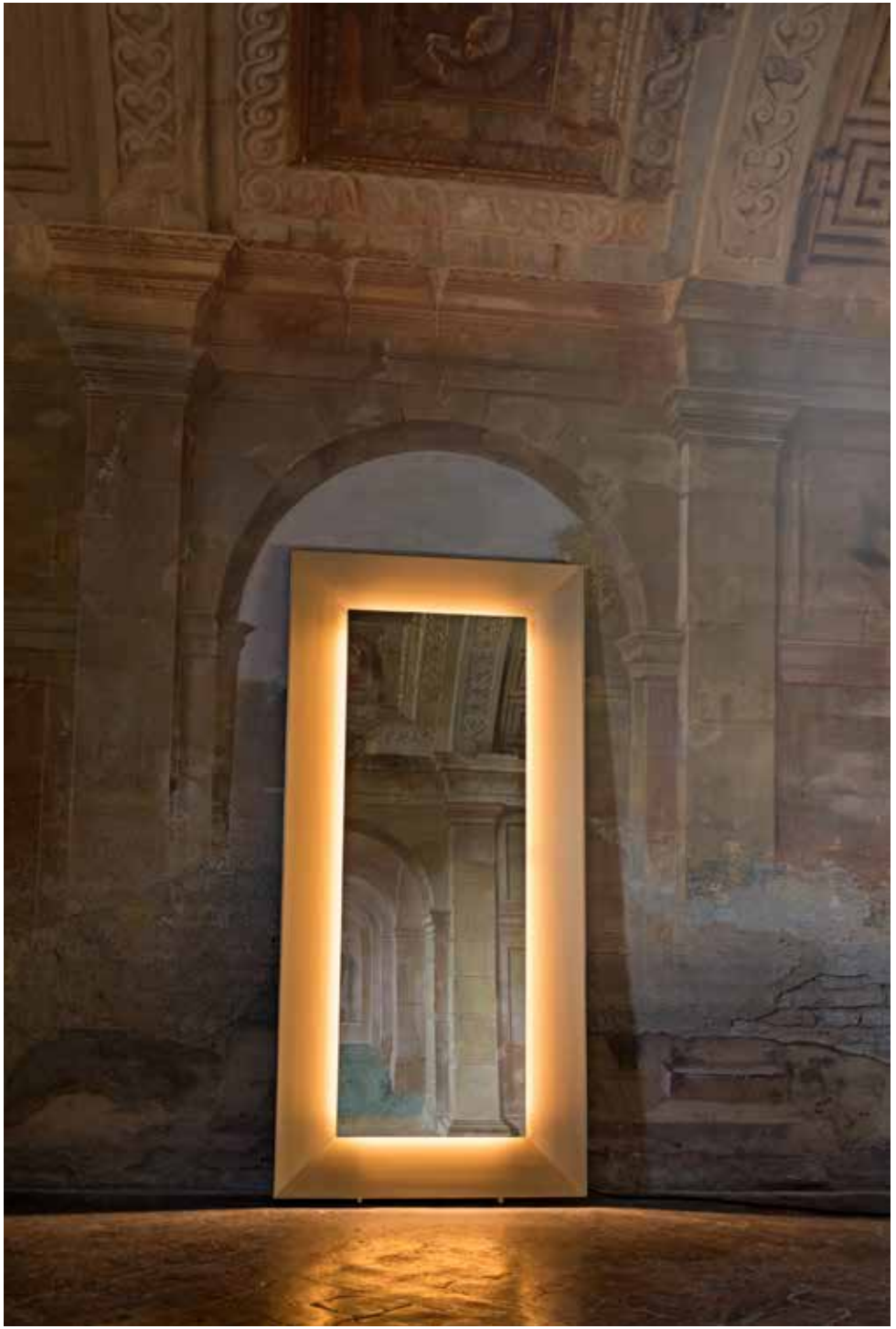

Best World

Square

DESIGN | PAOLO CASTELLI

Finishes of the above picture

Metal Finish
Matt Gold

La collezione Best World apre la serie di specchi luminosi di varie forme e dimensioni adatti a molti tipi di ambienti, come eleganti camere padronali, ingressi e diversi ambienti della casa. Best World è composto da un grande specchio di diverse dimensioni con raffinata cornice in metallo arricchita dalla preziosa finitura oro opaco satinato. Ogni pezzo della collezione è dotato, lungo tutto il perimetro, di un moderno sistema illuminante a led che trasforma l'oggetto in una lampada d'atmosfera, riducendo ulteriori fonti luminose nell'ambiente.

The Best World collection opens the range of luminous mirrors, available in different shapes and dimensions, that can suit a number of different spaces, such as elegant master bedrooms, entrances and other rooms of the house. Best World comprises a large mirror with an exquisite metal frame, boasting an elegant matt gold finish.Each piece of the collection features, along the edge, a modern led lighting system that transforms the mirror into a lamp, creating an atmosphere and reducing other luminous sources in the room.

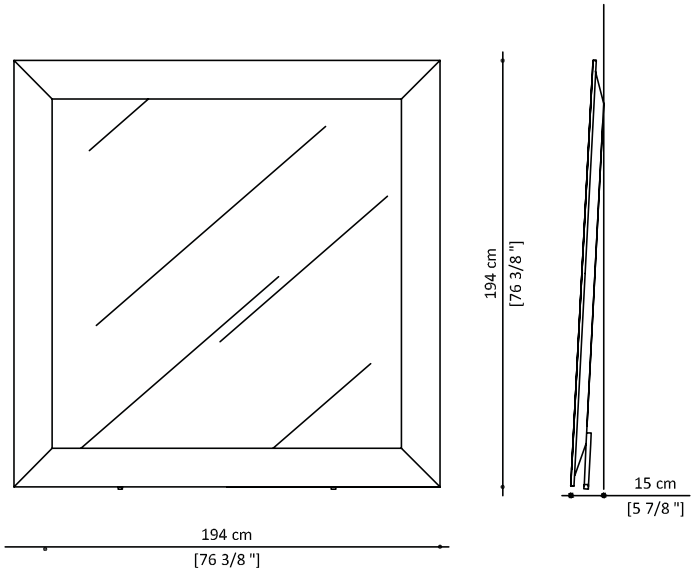

TECHNICAL SHEET
BEST WORLD SQUARE
Light source: Strip Led 12V/24W
Total power: 20W
Voltage: 220 - 240 V
Rated luminous flux:260 Lm
Colour temperature: 2700° K
Colour rendering index: Ra>80
Dimmer function: no
Cable lenght: 2 mt
Pin power cable: EU pin
Weight: Kg 110
Package size: 210 x 210 x 40 cm
Package weight: Kg 180

SQUARE | ILL.BEST.520 — 7.485,00€
Mat gold metal frame with led lighting

Inspiration
Fine furniture and lighting

Best World
Round

DESIGN | PAOLO CASTELLI

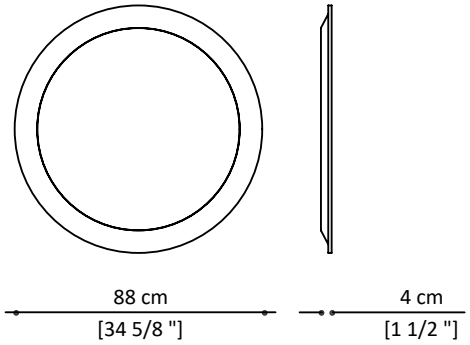

Finishes of the above picture

Metal Finish
Matt Gold

La collezione Best World apre la serie di specchi luminosi di varie forme e dimensioni adatti a molti tipi di ambienti, come eleganti camere padronali, ingressi e diversi ambienti della casa. Best World è composto da un grande specchio di diverse dimensioni con raffinata cornice in metallo arricchita dalla preziosa finitura oro opaco satinato. Ogni pezzo della collezione è dotato, lungo tutto il perimetro, di un moderno sistema illuminante a led che trasforma l'oggetto in una lampada d'atmosfera, riducendo ulteriori fonti luminose nell'ambiente.

The Best World collection opens the range of luminous mirrors, available in different shapes and dimensions, that can suit a number of different spaces, such as elegant master bedrooms, entrances and other rooms of the house. Best World comprises a large mirror with an exquisite metal frame, boasting an elegant matt gold finish.Each piece of the collection features, along the edge, a modern led lighting system that transforms the mirror into a lamp, creating an atmosphere and reducing other luminous sources in the room.

TECHNICAL SHEET
BEST WORLD ROUND
Light source: Strip Led 12V/24W
Total power: 20W
Voltage: 220 - 240 V
Rated luminous flux:260 Lm
Colour temperature: 2700° K
Colour rendering index: Ra>80
Dimmer function: no
Cable lenght: 2 mt
Pin power cable: EU pin
Weight: Kg 80
Package size: 160 x 160 x 40 cm
Package weight: Kg 140

ROUND | ILL.BEST.540 — 3.290,00€
Mat gold metal frame with led lighting

Murano
Vases

DESIGN | PAOLO CASTELLI

Finishes of the above picture

Murano Glass
Col. Ice Grey

Murano Glass
Col. Tabacco

Un arcobaleno di nuovi vasi arredo testimoni per eccellenza della creatività artigiana muranense declinata in opera d'arte. L'attuale risultato di questa preziosa collaborazione, sempre tesa a coniugare saperi antichi ed estetica contemporanea, è un'inedita sperimentazione di cromie pastello, trasparenti o opaline e forme.
Completano questa ricerca tre diverse lavorazioni: battuto, a coste e le caratteristiche bolle e sfere specchiate.

A rainbow of new decorative vases that reflect par excellence the creativity of Murano craftsmanship expressed as a work of art. The current outcome of this precious collaboration, always aimed at coupling ancient knowledge and contemporary aesthetics, is an unprecedented experimentation of pastel, transparent and milk-glass colours and forms.
Three different manufacturing techniques complete this research: battuto finish, ribbed, and the characteristic air bubbles and mirrored spheres.

COSTE

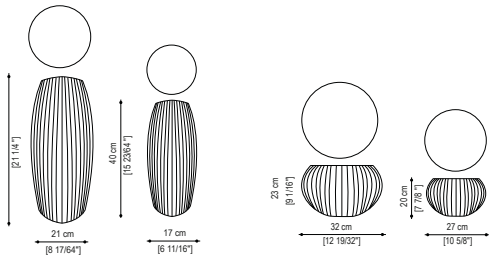

VASO SMALL | COM.VASE.DON.002 — 1188,00 €
Murano glass
Available colors: Pagliesco (Champagne) - Tabacco (Bronze) - Ice Grey

VASO BIG | COM.VASE.DON.001 — 1.674,00 €
Murano glass
Available colors: Pagliesco (Champagne) - Tabacco (Bronze) - Ice Grey

COPPA SMALL | COM.VASE.DON.004 — 1.188,00 €
Murano glass
Available colors: Pagliesco (Champagne) - Tabacco (Bronze) - Ice Grey

COPPA BIG | COM.VASE.DON.003 — 1.674,00 €
Murano glass
Available colors: Pagliesco (Champagne) - Tabacco (Bronze) - Ice Grey

BOLLE

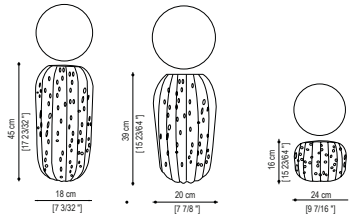

BOLLE VASO SMALL | COM.VASE.DON.006 — 1.070,00€
Murano glass
Available colors: Pagliesco (Champagne) - Tabacco (Bronze) - Ice Grey

BOLLE COPPA SMALL | COM.VASE.DON.007 — 1.188,00€
Murano glass
Available colors: Pagliesco (Champagne) - Tabacco (Bronze) - Ice Grey

BOLLE VASO BIG | COM.VASE.DON.005 — 1.188,00€
Murano glass
Available colors: Pagliesco (Champagne) - Tabacco (Bronze) - Ice Grey

Murano
Vases

DESIGN | PAOLO CASTELLI

Finishes of the above picture

Murano Glass
Col. Tabacco

Murano Glass
Col.Gold

Un arcobaleno di nuovi vasi arredo testimoni per eccellenza della creatività artigiana muranense declinata in opera d'arte. L'attuale risultato di questa preziosa collaborazione, sempre tesa a coniugare saperi antichi ed estetica contemporanea, è un'inedita sperimentazione di cromie pastello, trasparenti o opaline e forme.
Completano questa ricerca tre diverse lavorazioni: battuto, a coste e le caratteristiche bolle e sfere specchiate.

A rainbow of new decorative vases that reflect par excellence the creativity of Murano craftsmanship expressed as a work of art. The current outcome of this precious collaboration, always aimed at coupling ancient knowledge and contemporary aesthetics, is an unprecedented experimentation of pastel, transparent and milk-glass colours and forms.
Three different manufacturing techniques complete this research: battuto finish, ribbed, and the characteristic air bubbles and mirrored spheres.

BATTUTO

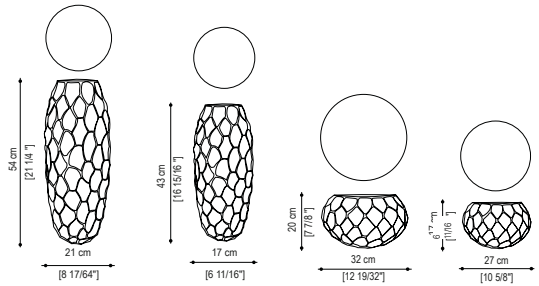

VASO SMALL | COM.VASE.DON.009 — 1.674,00 €
Murano glass
Available colors: Pagliesco (Champagne) - Tabacco (Bronze) - Amethyst - Ice Grey

VASO BIG | COM.VASE.DON.008 — 2.376,00 €
Murano glass
Available colors: Pagliesco (Champagne) - Tabacco (Bronze) - Amethyst - Ice Grey

COPPA SMALL | COM.VASE.DON.011 — 1.674,00 €
Murano glass
Available colors: Pagliesco (Champagne) - Tabacco (Bronze) - Amethyst - Ice Grey

COPPA BIG | COM.VASE.DON.010 — 2.376,00 €
Murano glass
Available colors: Pagliesco (Champagne) - Tabacco (Bronze) - Amethyst - Ice Grey

SFERE

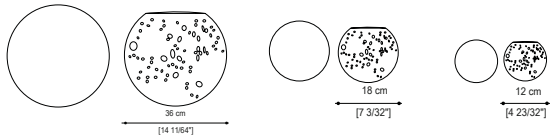

SMALL | COM.VASE.DON.014 — 324,00€
Murano glass
Available colors: Gold - Silver

MEDIUM | COM.VASE.DON.013 — 756,00€
Murano glass
Available colors: Gold - Silver

BIG | COM.VASE.DON.012 — 1.512,00 €
Murano glass
Available colors: Gold - Silver

Tailor made
Carpets

DESIGN | PAOLO CASTELLI

Pregiati tappeti realizzati a mano, con disegni contemporanei declinati in sette modelli. A garanzia dell'artigianalità del tappeto, possono presentarsi irregolarità nella tessitura e variazioni di tonalità tra un bagno di colore e l'altro dei filati.

Precious handmade carpets with contemporary design in seven models. As a guarantee of a craft product, there may be irregularities in the weave and variations of shade between one dyeing batch and the next.

PARIGI 400x300 cm 8.970,00 €
COM.CARP.SAH.001
Superior taftato in wool and bamboo silk with carving.
Base in wool BMB08.
Design 1: bamboo silk D006 with carving.
Design 2: bamboo silk D005 with carving.
Color: Ice

SHANGHAI 300x400 cm 8.980,00 €
COM.CARP.SAH.002
Hand-crafted taftato superior in wool and viscose in relief.
Wood: AE12, Viscose: A075
Color: taupe

BOLOGNA 300x260 cm 6.590,00 €
COM.CARP.SAH.010
Hand-crafted taftato superior, silk and wool in relief.
Base in bamboo silk: H12. Design in wool in relief I008.
Color: Moka

MILANO 300x400 cm 10.100,00 €
COM.CARP.SAH.003
Hand-crafted taftato superior, wool and visoce in relief.
Wool: AF09, Viscose: A117.
Color: Sand

NEW DELHI 400x400 cm 13.300,00 €
COM.CARP.SAH.009
Taftato superior in viscose with carving. Base in Viscose 02A.
Design with carving in Viscose 03B,
Color: Ivory

CARRARA 400 x 400 cm 14.500,00 €
COM.CARP.SAH.004
Taftato superior in silk bamboo and wool in relief.
Base in bamboo silk A019. Design in wool in relief AD11.
Color: cream

BEJING Ø 300 cm 7.100,00 €
COM.CARP.SAH.008
Taftato superior in wool with carving, base in wool BM04.
Design with carving in wool AF11
Color: silver

Tailor made
Carpets

DESIGN | PAOLO CASTELLI

Tappeti realizzati su nostra trama, con una scelta cromatica attuale e di forte impatto.
I tappeti sono finiti con microfettuccia cucita a mano.
12 Colori disponibili.

Carpet made with our specific texture, various colour selection with strong effect.
Edge in hand-stitched micro-fabric.
12 Colours available.

CARPET LUXURY OR

Off White Cod. 30	Beige Cod. 39	Khaky cod. 40	Dark Taupe cod. 49
Grey Cod. 90	Dark Grey Cod. 96	Gold cod. 52	Pink cod. 60
Salmon Cod. 57	Teal Cod. 27	Turquoise cod. 72	Black cod. 98

200 x 300 cm | COM.CARP.OR.001 Machine tufted - Composition PA Backing Action Back - Weaving Cut Pile	3.020,00 €
300 x 300 cm | COM.CARP.OR.002 Machine tufted - Composition PA Backing Action Back - Weaving Cut Pile	3.996,00 €
300 x 400 cm | COM.CARP.OR.003 Machine tufted - Composition PA Backing Action Back - Weaving Cut Pile	4.266,00 €
400 x 400 cm | COM.CARP.OR.004 Machine tufted - Composition PA Backing Action Back - Weaving Cut Pile	5.346,00 €
Ø 300 cm | COM.CARP.OR.005 Machine tufted - Composition PA Backing Action Back - Weaving Cut Pile	3.996,00 €
Ø 400 cm | COM.CARP.OR.006 Machine tufted - Composition PA Backing Action Back - Weaving Cut Pile	5.346,00 €

Cushions
Decorative

DESIGN | PAOLO CASTELLI

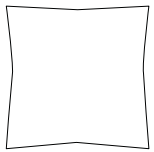

45 x 45 cm

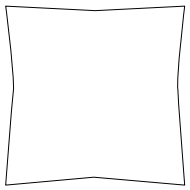

50 x 50 cm

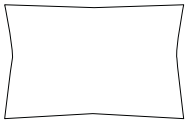

30 x 50 cm

Soffici cuscini resi morbidi ed accoglienti grazie ad un'imbottitura realizzata in soffice piuma d'oca. Tutti i cuscini sono impreziositi da piping in tinta.

Soft cushions made soft and cozy thanks to a stuffing made of soft goose down. All the cushions are embellished with matching piping.

45x45 FABRIC SUPERIOR | SED.CUSH.630.SUP Fabric Superior	305,00 €
45x45 FABRIC DELUXE | SED.CUSH.630.DEL Fabric Deluxe	350,0 €
45x45 FABRIC DECORATIVE | SED.CUSH.630.DEC Fabric Decorative	450,00 €
45x45 LEATHER | SED.CUSH.630.PEL Leather	510,00 €
45x45 FABRIC NABUK | SED.CUSH.630.NAB Nabuk	550,00€

50x50 FABRIC SUPERIOR | SED.CUSH.620.SUP Fabric Superior	305,00 €
50x50 FABRIC DELUXE | SED.CUSH.620.DEL Fabric Deluxe	350,00 €
50x50 FABRIC DECORATIVE | SED.CUSH.620.DEC Fabric Decorative	450,00 €
50x50 LEATHER | SED.CUSH.620.PEL Leather	510,00 €
50x50 FABRIC NABUK | SED.CUSH.620.NAB Nabuk	550,00€

30x50 FABRIC SUPERIOR | SED.CUSH.640.SUP Fabric Superior	305,00 €
30x50 FABRIC DELUXE | SED.CUSH.640.DEL Fabric Deluxe	350,00 €
30x50 FABRIC DECORATIVE | SED.CUSH.640.DEC Fabric Decorative	450,00 €
30x50 LEATHER | SED.CUSH.640.PEL Leather	510,00€
30x50 FABRIC NABUK | SED.CUSH.640.NAB Nabuk	550,00€

Inspiration

Fine furniture and lighting

PAOLO CASTELLI

Luci

Lighting

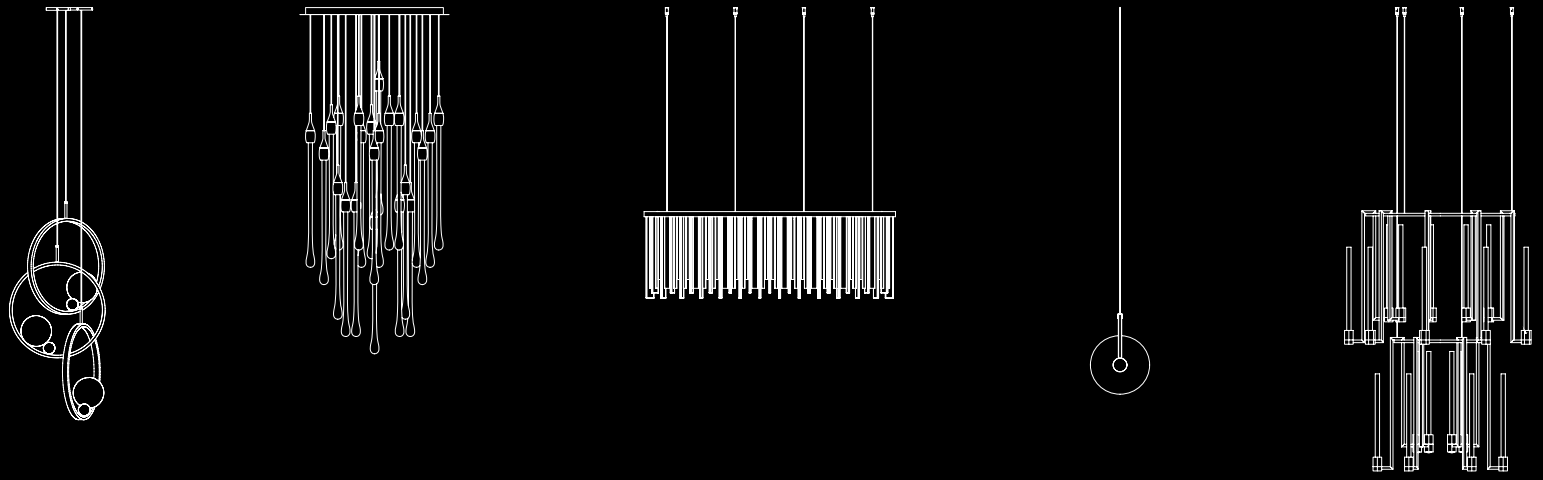

My Lamp
Suspension

DESIGN | PAOLO CASTELLI

CE

Finishes of the above picture

Metal Finish
Matt Gold

My Lamp Round di diametro 50 e 100 cm, sono lampadari tondi che possono creare un effetto dinamico e di forte impatto se disposto in più pezzi. Ideale per salotti e sale da pranzo raffinati dove si vuole creare un ambiente sofisticato ma non convenzionale. È composto da un importante bouquet di tubi realizzati in vetro borosilicato veneziano posti ad altezze sfasate e raccolti in una fascia metallica curvata, trattata con particolare finitura a più strati oro opaco.
Il telaio portante interno è realizzato in metallo nichelato.Contropiastra opalescente per diffondere la luce.

My Lamp Round with 50 and 100 cm diameter are round hanging lamps that bring a dynamic effect and have a great visual impact in arrangements with multiple pieces. Ideal in elegant lounges and dining rooms that want to create a sophisticated but unconventional ambience.
It comprises a significant "bouquet" of venetian borosilicate glass tubes, hanging from different heights, bound together by a curved metal band with a unique finish mat gold.
The internal supporting frame is made of nickel-plated metal. Opalescent counterplate to diffuse the light.

SUSPENSION ROUND 50

TECHNICAL SHEET
MY LAMP ROUND 50
Light source: STRIP LED 8W/M
Total power:55 W
Voltage:110 - 240 V
Rated luminous flux: 4420 Lm
Colour temperature: 2700° K
Colour rendering index: Ra80
Suspension cable lenght: 150 cm
Dimmer function: Yes
Weight: Kg 40
Package size: 71 x 71 x 78 cm
Package weight: Kg 65

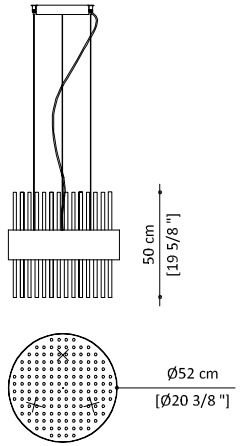

SUSPENSION ROUND 50 | ILL.MYLA.201 — 6.500,00€
Mat gold finish

SUSPENSION ROUND 100

TECHNICAL SHEET
MY LAMP ROUND 100
Light source: STRIP LED 8W/M
Total power:128 W
Voltage:115 - 230 V
Rated luminous flux:9750 Lm
Colour temperature: 2700° K
Colour rendering index: Ra80
Dimmer function: Yes
Weight: Kg 130
Package size: 125 x 125 x 90 cm
Package weight: Kg 170

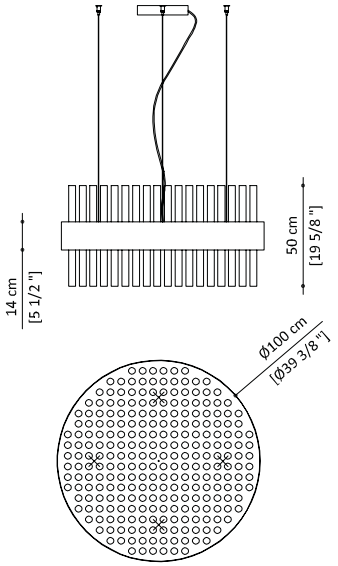

SUSPENSION ROUND 100 | ILL.MYLA.200 — 15.309,00€
Mat gold finish

◄ Bouquet di tubi realizzati in vetro borosilicato veneziano.

Bouquet of glass tubes made of Venetian borosilicate glass.

My Lamp
Suspension

DESIGN | PAOLO CASTELLI

CE

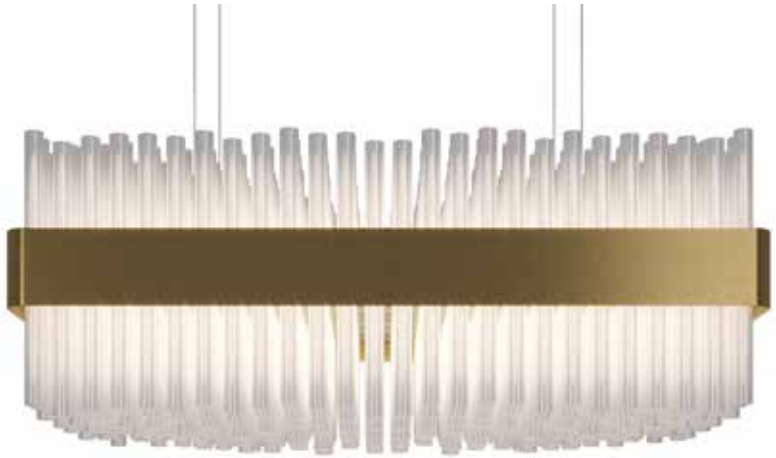

Finishes of the above picture

Metal Finish
Matt Gold

My Lamp Rectangular e Square, sono lampadari che possono creare un effetto dinamico e di forte impatto se disposto in più pezzi.
Ideale per salotti e sale da pranzo raffinati dove si vuole creare un ambiente sofisticato ma non convenzionale. È composto da un importante bouquet di tubi realizzati in vetro borosilicato veneziano posti ad altezze sfasate e raccolti in una fascia metallica curvata, trattata con particolare finitura a più strati oro opaco.
Il telaio portante interno è realizzato in metallo nichelato.Contropiastra opalescente per diffondere la luce.

My Lamp Rectangular and Square are hanging lamps that bring a dynamic effect and have a great visual impact in arrangements with multiple pieces. Ideal in elegant lounges and dining rooms that want to create a sophisticated but unconventional ambience.
It comprises a significant “bouquet” of venetian borosilicate glass tubes, hanging from different heights, bound together by a curved metal band with a unique finish mat gold.
The internal supporting frame is made of nickel-plated metal. Opalescent counterplate to diffuse the light.

SUSPENSION SQUARE

TECHNICAL SHEET
MY LAMP SQUARE
Light source: STRIP LED 8W/M
Total power:115 W
Voltage:110 - 230 V
Rated luminous flux: 9360 Lm
Colour temperature: 2700° K
Colour rendering index: Ra80
Suspension cable lenght: 200 cm
Dimmer function: Yes
Weight: Kg 100
Package size: 111 x 111 x 93 cm
Package weight: Kg 155

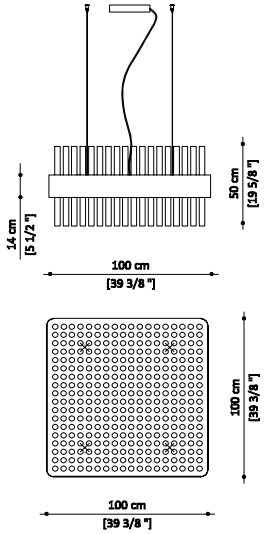

SUSPENSION SQUARE | ILL.MYLA.210 — 16.700,00€
Mat gold finish

SUSPENSION RECTANGULAR

TECHNICAL SHEET
MY LAMP RECTANGULAR
Light source: STRIP LED 12W/M
Total power:132 W
Voltage:12 V
Rated luminous flux: 7200 Lm
Colour temperature: 2700° K
Colour rendering index: Ra80
Suspension cable lenght: 200 cm
Dimmer function:Yes
Weight: Kg 132
Package size: 125 x 125 x 90 cm
Package weight: Kg 200

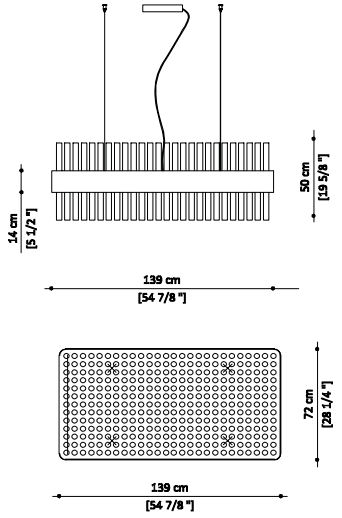

SUSPENSION RECTANGULAR | ILL.MYLA.220 — 17.577,00€
Mat gold finish

My Lamp
Sphere

DESIGN | PAOLO CASTELLI

CE

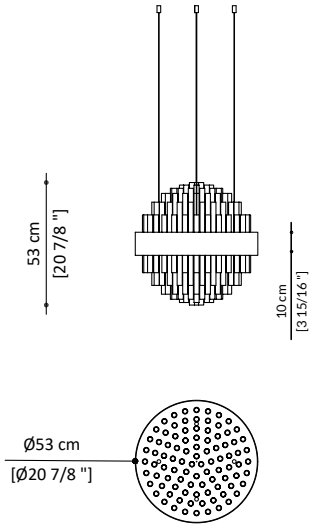

TECHNICAL SHEET
MY LAMP SPHERE
Light source: STRIP LED
Total power:40 W
Voltage:12-24 V
Rated luminous flux: 7200 Lm
Colour temperature: 2700° K
Colour rendering index: Ra>80
Suspension cable lenght: 150 cm
Dimmer function: Yes
Weight: Kg 36
Package size: 72 x 72 x 75 cm
Package weight: Kg 78

Finishes of the above picture

Metal Finish
Matt Gold

My Lamp Sphere è composto da un importante bouquet di tubi realizzati in vetro borosilicato veneziano posti ad altezze sfasate e raccolti in una fascia metallica curvata, trattata con particolare finitura a più strati oro opaco.
Il telaio portante interno è realizzato in metallo nichelato.

My Lamp Sphere comprises a significant "bouquet" of venetian borosilicate glass tubes, hanging from different heights, bound together by a curved metal band with a unique finish mat gold.
The internal supporting frame is made of nickel-plated metal.

SUSPENSION SPHERE | ILL.MYLA.201S
Mat gold finish

7.380,00€

My Lamp
Ceiling

DESIGN | PAOLO CASTELLI

CE

Finishes of the above picture

Metal Finish
Matt Gold

My lamp ceiling è una plafoniera circolare fortemente scenografica, che attraverso le diverse altezze dei vetri illuminati crea un decoro dinamico e raffinato. È composta da un importante bouquet di tubi realizzati in vetro borosilicato veneziano e raccolti in una fascia metallica curvata, trattata con particolare finitura oro opaco. Il telaio portante interno è realizzato in metallo nichelato. Disponibile in 2 misure.

My lamp ceiling is a round lamp with a great visual impact, which adds a dynamic and elegant touch thanks to the different heights of lit glass elements. It comprises a significant "bouquet" of venetian borosilicate glass tubes bound together by a curved metal band mat gold finished .The internal supporting structure has a nickel metal finish.

CEILING ROUND 100

TECHNICAL SHEET
MY LAMP CEILING ROUND 100
Light source: STRIP LED 8W/M
Total power:60,5 W
Voltage:115 - 230 V
Rated luminous flux:4615 Lm
Colour temperature: 2700° K
Colour rendering index: Ra80
Dimmer function: Yes
Weight: Kg 120
Package size: 125 x 125 x 90 cm
Package weight: Kg 160

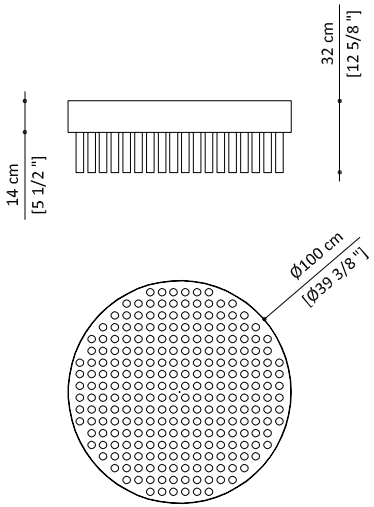

CEILING ROUND 100 | ILL.MYLA.300 — 15.309,00€
Mat gold finish

CEILING ROUND 140

TECHNICAL SHEET
MY LAMP CEILING ROUND 140
Light source: STRIP LED 11W/M
Total power:108 W
Voltage:110 - 230 V
Rated luminous flux: 11.500 Lm
Colour temperature: 2700° K
Colour rendering index: Ra80
Dimmer function: Yes
Weight: Kg 180
Package size: 160 x 160 x 90cm
Package weight:Kg 350

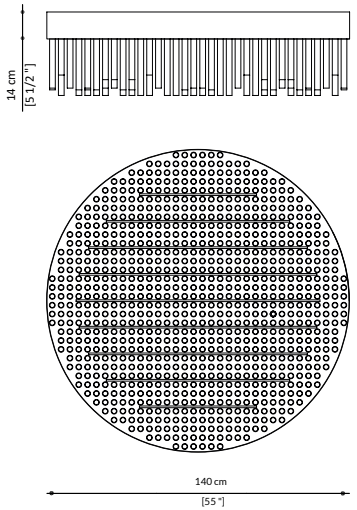

CEILING ROUND 140 | ILL.MYLA.302 — 29.484,00€
Mat gold finish

My Lamp
Table

DESIGN | PAOLO CASTELLI

CE

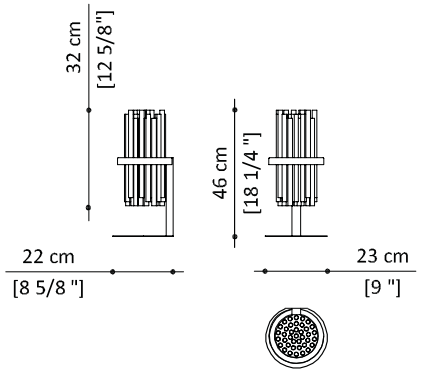

TECHNICAL SHEET
MYLAMP TABLE
Light source: Strip LED
Total power: 13W
Voltage: 240 V
Rated luminous flux: 860 Lm
Colour temperature: 2700° K
Colour rendering index: Ra80
Dimmer function: No
Weight: Kg 4
Package size: 30 x 30 x 50 cm
Package weight: Kg 15

Finishes of the above picture

Metal Finish
Matt Gold

My lamp table è una graziosa ed elegante lampada da tavolo, ideale per studi, salotti e zona notte, composta da una struttura metallica trattata in finitura oro opaco che regge un piccolo bouquet di tubi realizzati in vetro borosilicato veneziano.

My lamp table is a visually pleasing and elegant desk lamp, ideal for studios, lounges and bedrooms.
It comprises a metal structure with a mat gold finish that supports a "bouquet" of tubes made from venetian borosilicate glass.

MY LAMP TABLE | ILL.MYLA.400 — 2.610,00 €
Matt gold finish

My Lamp
Wall

DESIGN | PAOLO CASTELLI

CE

Finishes of the above picture

Metal Finish
Matt Gold

My Lamp Wall è una raffinata ed elegante lampada a parete che completa la collezione My Lamp. Si compone di un raffinato bouquet di tubi realizzati in vetro borosilicato veneziano e raccolti in una fascia metallica con finitura oro opaco.

My Lamp Wall is a stylish and elegant wall lamp that completes the My Lamp collection. It comprises a significant “bouquet” of venetian borosilicate glass tubes bound together by a metal band with a unique finish mat gold.

SMALL

TECHNICAL SHEET
MY LAMP WALL
Light source: LED
Total power: 15W
Voltage:100-240V
Rated luminous flux: 1300 Lm
Colour temperature: 2700° K
Colour rendering index: Ra>80
Dimmer function: No
Weight: Kg 4
Package size: 130 x 30 x 50 cm
Package weight: Kg 15

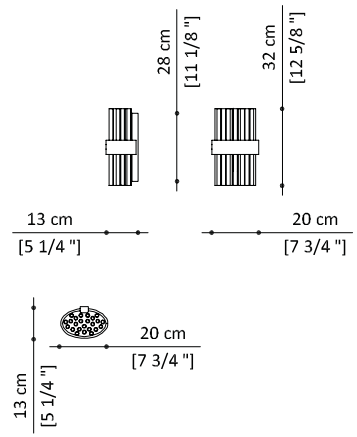

SMALL | ILL.MYLA.510
Mat gold finish

2.610,00€

BIG

TECHNICAL SHEET
MY LAMP WALL BIG
Light source: Strip LED 15 W/M
Total power: 52W
Voltage:220-240V
Rated luminous flux: 4760 Lm
Colour temperature: 2700° K
Colour rendering index: Ra>80
Dimmer function: No
Weight: Kg 17
Package size: 200 x 77 x 48 cm
Package weight: Kg 65

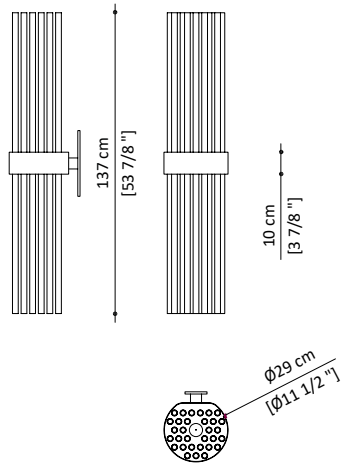

BIG | ILL.MYLA.520
Mat gold finish

4.780,00€

Inspiration
Fine furniture and lighting

My Lamp
Floor

DESIGN | PAOLO CASTELLI

CE

Finishes of the above picture

Metal Finish
Matt Gold

My Lamp Floor è una lampada da terra, elegante nelle forme, che dona una luce ed un'atmosfera calda all'ambiente in cui viene inserito. Da solo o in coppia, per creare una perfetta simmetria, arricchisce e caratterizza ogni possibile situazione abitativa.
È realizzato con una base e struttura in metallo, rifinita in finitura oro opaco e tubi cilindrici aperti realizzati in vetro borosilicato veneziano.

My Lamp Floor is a standing lamp, boasting an elegant shape that brings light and a warm atmosphere to any space. Single or in a pair, to create a perfect symmetry, enriches and adds character to any room. It features a metal base and a structure with mat gold finish and open cylindrical tubes made from venetian borosilicate glass.

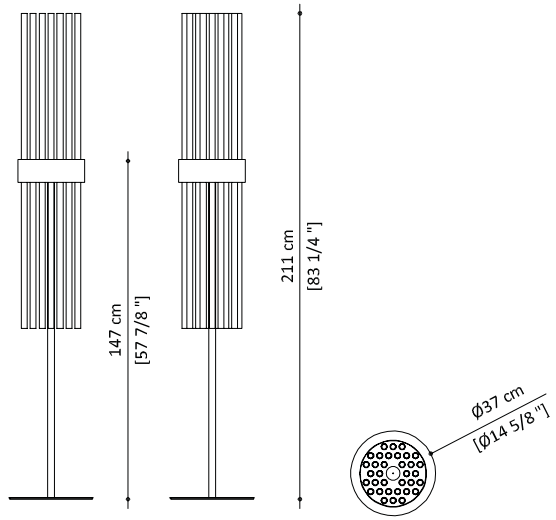

TECHNICAL SHEET
MYLAMP FLOOR
Light source: 4 LED modules
Total power: 35W
Voltage: 240 V
Rated luminous flux: 2600 Lm
Colour temperature: 2700° K
Colour rendering index: Ra80
Dimmer function: No
Weight: Kg 39
Package size: 160 x 76 x 60 cm
Package weight: Kg 78

MY LAMP FLOOR | ILL.MYLA.100 — 5.250,00 €
Mat gold finish

Kalì

Suspension

DESIGN | PAOLO CASTELLI

CE

Finishes of the above picture

Muranese glass with 24KTgolden leaf powder

Metal finish Matt Gold

Chandelier di imponenza scultorea che crea oniriche geometrie di luci tra bracci che sorreggono candele dorate. Kalì chandelier vanta una lavorazione creata interamente sulla isola di Murano da storici artigiani. I bracci metallici hanno terminali a sezione esagonale che reggono elementi in vetro che racchiudono all'interno frammenti di foglia oro 24 KT in dispersione. Sotto ai bracci inferiori sono inseriti degli spot light. Illuminazione a led. La lampada è rifinita in finitura oro opaco. Nella versione a 3 anelli il lampadario king size è perfetto per impreziosire ambienti importanti dalle ampie volumetrie.

Statuesque imposing chandelier, creating dreamlike light geometries among its hands bearing golden candles. Kalì chandelier is the result of an artisan handcraft totally made in Murano island. Made of brass, its metal hands - esagonal shaped- hold up glass elements enclosing 24 KT gold leaf particles. Under the below ring there are spot lights. Final finish mat gold.LED lighting .
3-rings model is a king size chandelier perfect for embellishing important halls with large volumes.

2 RINGS

TECHNICAL SHEET
KALI' 2RINGS
Light source: Power LED COB
Total power: 30 led spot x 1 W + 6 led spot x 3W
Voltage:230V
Rated luminous flux: 6300 Lm
Colour temperature: 3000° K
Colour rendering index: Ra>80
Dimmer function: Yes - only for spots
Weight: Kg 100
Package size: 115 x 115 x 65 cm
Package weight: Kg 200

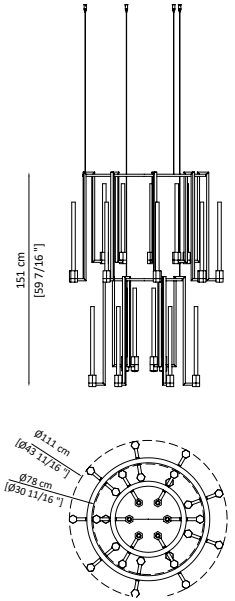

2 RINGS | ILL.KALI.210
Metal finish matt gold
Muranese glass with 24KTgolden leaf powder

25.515,00€

3 RINGS

TECHNICAL SHEET
KALI' 3RINGS
Light source: Power LED COB
Total power: 58 led spot x 1 W + 6 led spot x 3W
Voltage:230V
Rated luminous flux: 10500 Lm
Colour temperature: 3000° K
Colour rendering index: Ra>80
Dimmer function: Yes - only for spots
Weight: Kg 160
Package size structure: 156 x 136 x 45 cm
Package weight structure: Kg 94
Package size glass candles: 100 x 60 x 70 cm
Package weight structure: Kg 100

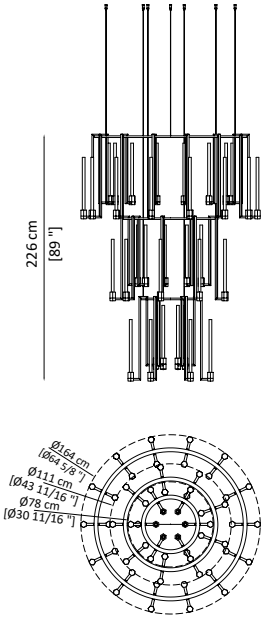

3 RINGS | ILL.KALI.220
Metal finish matt gold
Muranese glass with 24KTgolden leaf powder

41.391,00€

Kalì
Wall

DESIGN | PAOLO CASTELLI

CE

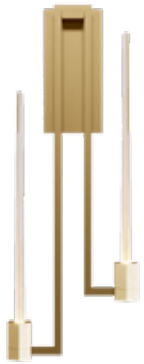

Finishes of the above picture

Metal Finish
Matt Gold

Muranese glass with
24KTgolden leaf
powder

Kalì vanta una lavorazione creata interamente sulla isola di Murano da storici artigiani.
Della linea fa parte anche questa versione applique, realizzata con due bracci in metallo finitura oro opaco che sorreggono elementi in vetro di Murano con foglia d'oro 24 KT all'interno, in dispersione.

Kalì is the result of an artisan handcraft totally made in Murano island.Wall version of Kalì chandelier is also part of this collection. It is realised with a metal hand with mat gold finish bearing two Murano glass elements enclosing 24 KT golden leaf.

KALI' WALL

TECHNICAL SHEET
KALI' WALL
Light source: 2 spot led x 2 W
Total power: 4W
Voltage: 230 V
Rated luminous flux: 300 Lm
Colour temperature: 3000° K
Colour rendering index: Ra80
Dimmer function: No
Weight: Kg 8
Package size: 80 x 40 x 40 cm
Package weight: Kg 15

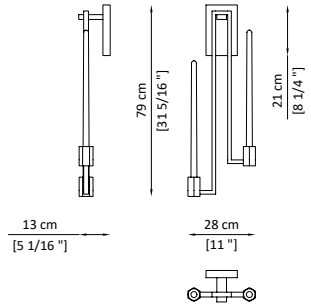

KALI' WALL | ILL.KALI.500 — 2.495,00 €
Metal structure mat gold
Muranese glass with 24KTgolden leaf powder

KALI' WALL SINGLE

TECHNICAL SHEET
KALI' WALL SINGLE
Light source: 2 spot led
Total power: 2W
Voltage: 230 V
Rated luminous flux: 150 Lm
Colour temperature: 3000° K
Colour rendering index: Ra80
Dimmer function: No
Weight: Kg 4
Package size: 40 x 40 x 40 cm
Package weight: Kg 10

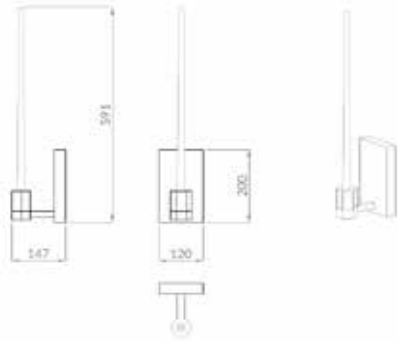

KALI' WALL SINGLE | ILL.KALI.510 — 1.080,00€
Metal structure mat gold
Muranese glass with 24KTgolden leaf powder

Inspiration
Fine furniture and lighting

Golden Cloud
Suspension

DESIGN | PAOLO CASTELLI

CE

Finishes of the above picture

Muranese glass with 24KTgolden leaf powder

Metal Finish
Matt Gold

Prezioso lampadario interamente realizzato a mano secondo le più antiche tradizioni muranesi. Il corpo delle 22 "nuvole" (versione oval con 6 spot integrati) e 23 "nuvole" (versione round, con 5 spot integrati), disposte ad altezze sfalsate, è realizzato in vetro di murano con un triplo passaggio di foglia d'oro e viene modellato a mano in stampo sagomato. La "nuvola" in vetro è agganciata a un corpo metallico in finitura oro satinato e alloggia al suo interno un moderno supporto a led. Il corpo metallico è infine ancorato su una piastra in acciaio, verniciata opaca in bianco RAL 9016, nero RAL 9005, oro. È disponibile in due versioni: Oval e Round.

A refined chandelier made entirely by hand following the most ancient Murano traditions. The body of the 22 "clouds" (Oval version, with 6 built-in spotlights) and 23 "clouds" (Round version, with 5 built-in spotlights), arranged at staggered heights, is made of Murano glass with a triple pass of gold leaf and is formed by hand in a shaped mould.
The glass "cloud" is attached to a metal body with a satin gold finish and houses a modern LED fitting.
The metal body is anchored to a steel plate painted matt white RAL 9016, black RAL 9005, gold.
Available in two versions: Oval and Round.

OVAL

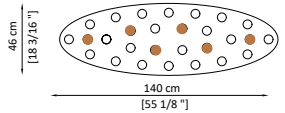

TECHNICAL SHEET
GOLDEN CLOUD OVAL
Light source: LED
Glass elements power: 3W x 22
Spots power: 18 W (6 x 3 W)
Voltage: 220 - 240 V
Rated luminous flux:5000 Lm
Colour temperature: 2700° K
Colour rendering index: Ra>80
Dimmer function: Yes - only for spots
Weight: Kg 71
Package size: 156 x 61 x 39 cm
Package weight: Kg 106
Package volume: Kg 0,37

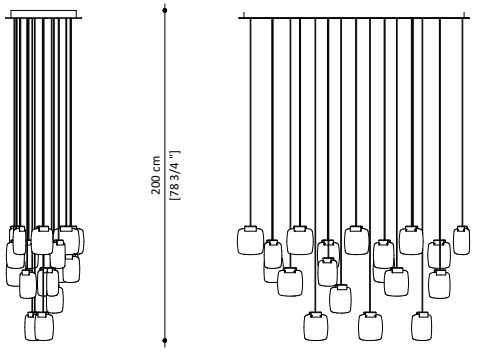

OVAL | ILL.GOLD.230 — 19.050,00€
22 glass pendants and 6 buit-in spotlights
Metal cap in mat gold finish - Muranese glass with 24KTgolden leaf powder

ROUND

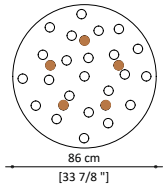

TECHNICAL SHEET
GOLDEN CLOUD ROUND
Light source: LED
Glass element power: 3W x 23
Spots power: 15W (5 x 3 W)
Voltage: 220 - 240 V
Rated luminous flux:5000 Lm
Colour temperature: 2700° K
Colour rendering index: Ra>80
Dimmer function: Yes - only for spots
Weight: Kg 59
Package size: 96 x 96 x 57 cm
Package weight: Kg 94
Package volume: Kg 0,44

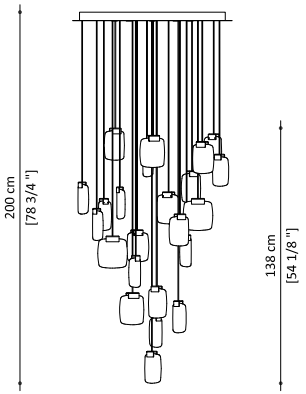

ROUND | ILL.GOLD.220 — 19.050,00€
23 glass pendants and 5 buit-in spotlights
Metal cap in mat gold finish - Muranese glass with 24KTgolden leaf powder

◄ Vetro di Murano modellato a mano in stampo sagomato.

Handcrafted moulded Murano glass.

Allure
Suspension

DESIGN | PAOLO CASTELLI

CE

Finishes of the above picture

Muranese glass with 24KTgolden leaf powder

Satined Brass

La composizione Allure è un prezioso lampadario interamente realizzato a mano secondo le più antiche tradizioni muranesi.
Il corpo delle 22 gocce (versione oval con 6 spot integrati) e 23 gocce (versione round, con 5 spot integrati), disposte ad altezze sfalsate, è realizzato in vetro di murano pieno, color cristallo veneziano, con incamiciata una preziosa foglia d'oro 24 kt. La bossola superiore è in ottone, e alloggia un moderno supporto a led. La bossola è infine ancorata su una piastra in acciaio, verniciata opaca in bianco RAL 9016, nero RAL 9005, oro.

È disponibile nelle versioni Oval (6 spot led) , Round (5 spot led) e Side.

The Allure is an exquisite lamp entirely handcrafted according to traditional murano techniques.
The venetian crystal colour drops (n. 22 drops and 6 spots for oval version and n. 23 drops and 5 spots for round version), positioned at different heights, are made in solid murano glass enclosing precious 24 kt gold or silver leaf. In the gold finish, the top cap is made from brass and includes the modern led light support. The top plate is anchored to a steel plate painted matt white RAL 9016, black RAL 9005, gold.

It is available in versions: Oval with six integrated spots, Round with 5 integrated spots, and Side.

OVAL

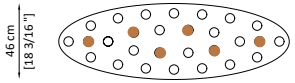

TECHNICAL SHEET
ALLURE OVAL
Light source:Power LED
Glass elements power: 23,1 W (22 x 1,05 W)
Spots power: 18 W (6 x 3 W)
Voltage: 220 - 240 V
Rated luminous flux: 5000 Lm
Colour temperature: 3000° K
Colour rendering index: Ra83
Dimmer function: Yes - only for spots
Weight: Kg 90
Package size: 160 x 60 x 60 cm
Package weight: Kg 106

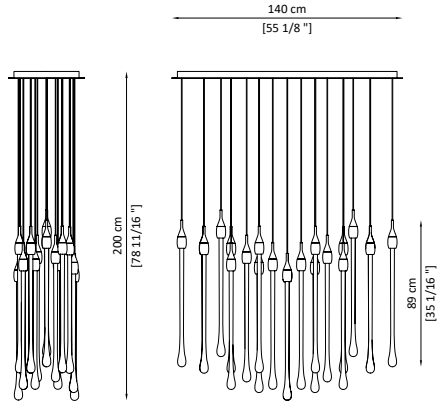

ALLURE OVAL | ILL.ALLU.230 29.380,00€
22 glass pendants and 6 buit-in spotlights
Metal cap in satined brass - Muranese glass with 24KTgolden leaf powder

ROUND

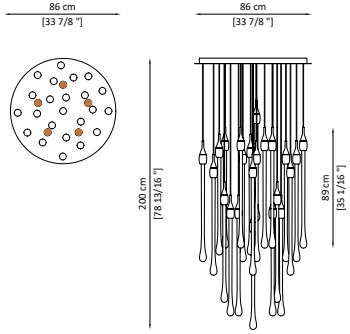

TECHNICAL SHEET
ALLURE ROUND
Light source:Power LED
Glass elements power: 24,15 W (23 x 1,05 W)
Spots power : 15 W (5 x 3 W)
Voltage: 220 - 240 V
Rated luminous flux: 2860 Lm
Colour temperature: 3000° K
Colour rendering index: Ra83
Dimmer function: Yes - only for spots
Weight: Kg 90
Package size: 96 x 96 x 57 cm
Package weight: Kg 106

ALLURE ROUND | ILL.ALLU.220 30.550,00€
23 glass pendants and 5 buit-in spotlights
Metal cap in satined brass - Muranese glass with 24KTgolden leaf powder

◄ Vetro di Murano soffiato a mano, con polvee d’oro 24K totalmente realizzato a mano, ogni goccia è un pezzo unico.

Handblown Muranese glass, 24K golden leaf powder. Any glass component is totally handmade so any item is unique.

Inspiration
Fine furniture and lighting

Allure
Side

DESIGN | PAOLO CASTELLI

CE

Finishes of the above picture

Muranese glass with 24KTgolden leaf powder

Satined Brass

La composizione Allure è un prezioso lampadario interamente realizzato a mano secondo le più antiche tradizioni muranesi. La versione Side ha 6 gocce realizzate in vetro di murano pieno, color cristallo veneziano, con incamiciata una preziosa foglia d'oro 24 kt. La bossola superiore è in ottone e alloggia un moderno supporto a led, ed è ancorata su una piastra in acciaio, verniciata opaca in bianco RAL 9016, nero RAL 9005, oro.
La versione Side può avere su richiesta come optional Spot led.

The Allure is an exquisite lamp entirely handcrafted according to traditional murano techniques.
The Side version has 6 drops made in solid murano glass enclosing precious 24 kt gold
The top cap is made from brass and includes the modern led light support. The top plate is anchored to a steel plate painted matt white RAL 9016, black RAL 9005, gold.
The Side version can have optional Spot Leds on request.

SIDE

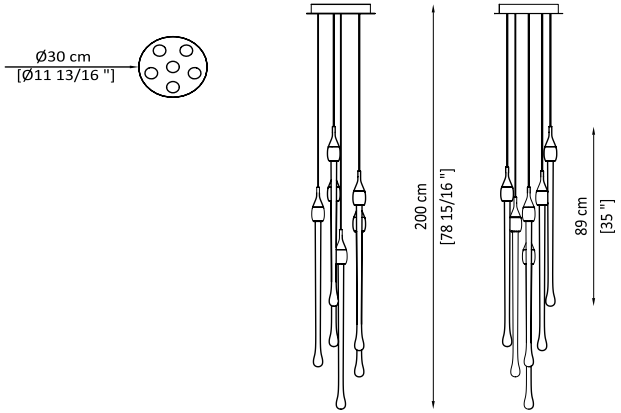

TECHNICAL SHEET
ALLURE SIDE
Light source:Power LED
Glass elements power: 6,30 W (6 x 1,05 W)
Voltage: 220 - 240 V
Rated luminous flux: 2860 Lm
Colour temperature: 3000° K
Colour rendering index: Ra83
Dimmer function: No
Weight: Kg 52
Package size: 68 x 84 x 57 cm
Package weight: Kg 70
Package volume: Kg 0, 33

ALLURE SIDE | ILL.ALLU.200 7.830,00€
6 glass pendants
Metal cap in satined brass - Muranese glass with 24KTgolden leaf powder

Labilis

Composition

DESIGN | PAOLO CASTELLI

CE

Finishes of the above picture

Metal Black
Matt
varnished

Metal Finish
Matt Bronzed
Brass

Un nuovo alfabeto grafico fatto di essenziali elementi geometrici che disegnano nello spazio contemporanee forme di luce. Tre anelli di diverso diametro installabili singolarmente o in composizione da 4, 7 e 10 anelli. L'anello in metallo è finitura nero opaco con diffusore di luce led in policarbonato opalino bianco perimetrale. Ogni anello monta uno spot in ottone finitura bronzo ottone opaco. Gli anelli presentano tre cavi di sospensione, di cui uno di alimentazione. Cavi elettrici della lunghezza di due mt.

Optionals su richiesta: anelli dimmerabili;
rosoni cilindrici in metallo con alimentatore interno, adatto per installazione a soffitto.

Rosone cilindrico in metallo con alimentatore interno, adatto per installazione a soffitto (optional)*.

Metal cylindrical rose holding local drivers,suitable for ceiling installation (optional) *.

Dim. Ø9 x h 20cm

A new graphic alphabet consisting of essential geometric elements that create contemporary light forms in the space. Three rings in different diameters can be installed separately or as composition (4, 7, 10 rings).
The metal ring is in satin black finish, with light diffuser in white opal polycarbonate along the perimeter. Each ring carries a LED spot in mat brass bronze finish. Each ring has three suspension cables, one of which is a power supply one. Electric cables are two meters long.

Optionals available on request: dimmable rings; metal cylindrical roses holding local drivers,suitable for ceiling installation.

4 RINGS

TECHNICAL SHEET 4 RINGS
Light source: Strip Led 140 Led/m + spot led (4X)
Total power: 35 W - Strip led 14,4W/m; spot 4,2W (10X)
Voltage: 230 V
Rated luminous flux spots: 1320Lm
Rated luminous flux strip led:6357 Lm
Colour temperature: 2700° K
Colour rendering index: 90
Dimmer function: Yes - only for rings
Cables lenght: 2mt
Weight: 18 Kg

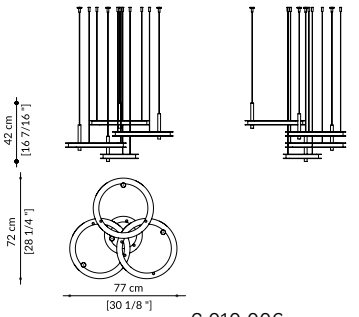

4 RINGS | ILL.LABI.230 — 6.010,00€
1 ring Ø27 + 3 rings Ø43 in metal matt black varnished and led spots in matt bronzed brass - Remote drivers

OPTIONAL* — 1.475,00€
4 metal cylindrical roses holding local drivers,suitable for ceiling installation

7 RINGS

TECHNICAL SHEET 7 RINGS
Light source: Strip Led 140 Led/m + spot led (7X)
Total power: 77W - Strip led 14,4W/m; spot 4,2 W (7X)
Voltage: 230 V
Rated luminous flux spots: 2310 Lm
Rated luminous flux strip led: 14928 Lm
Colour temperature: 2700° K
Colour rendering index: 90
Dimmer function: Yes - only for rings
Cables lenght: 2mt
Weight: 40 Kg

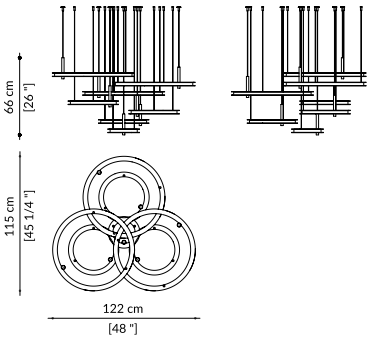

7 RINGS | ILL.LABI.220 — 12.250,00€
1 ring Ø27 + 3 rings Ø43 + 3 rings Ø70 in metal matt black varnished and led spots in matt bronzed brass - Remote drivers

OPTIONAL* — 2.720,00€
N°7 metal cylindrical roses holding local drivers,suitable for ceiling installation

10 RINGS

TECHNICAL SHEET 10 RINGS
Light source: Strip Led 140 Led/m + spot led (10X)
Total power: 97W - Strip led 14,4W/m; spot 4,2W (10X)
Voltage: 230 V
Rated luminous flux spots: 3300Lm
Rated luminous flux strip led: 17541 Lm
Colour temperature: 2700° K
Colour rendering index: 90
Dimmer function: Yes- only for rings
Cables lenght: 2mt
Weight: 48 Kg

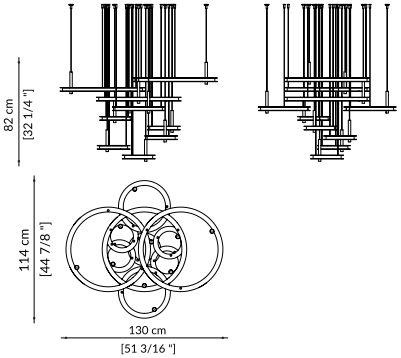

10 RINGS | ILL.LABI.210 — 15.770,00€
N° 10 tubes spot LED I finish matt bronzed brass
5 rings Ø27 + 2 rings Ø43 + 3 rings Ø70 in metal matt black varnished and led spots in matt bronzed brass - Remote drivers

OPTIONAL* — 3.969,00€
N°10 metal cylindrical roses holding local drivers,suitable for ceiling installation

Inspiration
Fine furniture and lighting

Labilis

Rings

DESIGN | PAOLO CASTELLI

CE

Finishes of the above picture

Metal Black
Matt
varnished

Metal Finish
Matt Bronzed
Brass

Tre anelli di diverso diametro installabili singolarmente o in composizione da 4, 7 e 10 anelli. L'anello in metallo è finitura nero opaco con diffusore di luce led in policarbonato opalino bianco perimetrale. Ogni anello monta uno spot in ottone finitura bronzo ottone opaco. Gli anelli presentano tre cavi di sospensione, di cui uno di alimentazione. Cavi elettrici della lunghezza di due mt.

Optionals su richiesta: anelli dimmerabili;
rosone cilindrico in metallo con alimentatore interno, adatto per installazione a soffitto.

Rosone cilindrico*
per soluzione con installazione degli alimentatori a soffitto (optional).

Cylindrical rose * suitable for installation with ceiling power supplies (optional).

Dim. Ø9 x h 20cm

Three rings in different diameters can be installed separately or as composition (4, 7, 10 rings).
The metal ring is in satin black finish, with light diffuser in white opal polycarbonate along the perimeter. Each ring carries a LED spot in mat brass bronze finish. Each ring has three suspension cables, one of which is a power supply one. Electric cables are two meters long.

Optionals available on request: dimmable rings;
metal cylindrical rose holding local driver,suitable for ceiling installation.

RING Ø27

TECHNICAL SHEET LABILIS Ø27
Light source: Strip Led 140 Led/m + spot led
Total power: 7,3W - Strip led 14,4W/m; spot 4,2W
Voltage: 230 V
Rated luminous flux spot: 330 Lm
Rated luminous flux strip led: 1092 Lm
Colour temperature: 2700°K
Colour rendering index: 90
Dimmer function: Yes - only for ring
Weight: 2,8 Kg

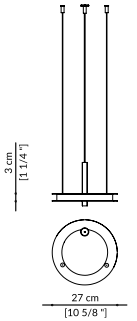

RING Ø27 | ILL.LABI.231 — 1.420,00€
1 ring Ø27 in metal matt black varnished and led spot in matt bronzed brass
Remote drivers

OPTIONAL* — 380,00€
Metal cylindrical rose holding local driver,suitable for ceiling installation

RING Ø43

TECHNICAL SHEET LABILIS Ø43
Light source: Strip Led 140 Led/m + spot led
Total power: 9,7W - Strip led 14,4W/m; spot 4,2W
Voltage: 230 V
Rated luminous flux spots: 330 Lm
Rated luminous flux strip led: 1755 Lm
Colour temperature: 2700°K
Colour rendering index: 90
Dimmer function: Yes - only for ring
Weight: 4,5 Kg

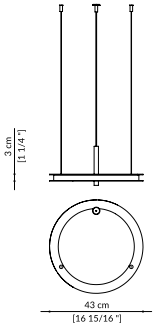

RING Ø43 | ILL.LABI.221 — 1.700,00€
1 ring Ø43 in metal matt black varnished and led spot in matt bronzed brass
Remote drivers

OPTIONAL* — 380,00€
Metal cylindrical rose holding local driver,suitable for ceiling installation

RING Ø70

TECHNICAL SHEET LABILIS Ø70
Light source: Strip Led 140 Led/m + spot led
Total power:13,6W - Strip led 14,4W/m; spot 4,2W
Voltage: 230 V
Rated luminous flux spots: 330 Lm
Rated luminous flux strip led: 2857 Lm
Colour temperature: 2700°K
Colour rendering index: 90
Dimmer function: Yes - only for ring
Weight: 7,3 Kg

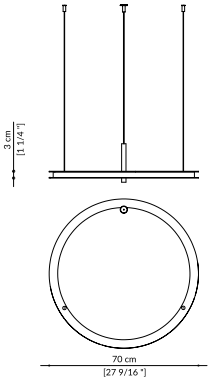

RING Ø70 | ILL.LABI.211 — 2.380,00€
1 ring Ø70 in metal matt black varnished and led spot in matt bronzed brass
Remote drivers

OPTIONAL* — 380,00€
Metal cylindrical rose holding local driver,suitable for ceiling installation

L'illuminazione tecnica degli spot completa quella decorativa creata dai cerchi luminosi.

Technical illumination of the spots combined with decorative bright circles.

Golden Disc
Suspension

DESIGN | PAOLO CASTELLI

CE

Finishes of the above picture

Bovine Leather
Col. 634 Oasi

Muranese glass with
24KTgolden leaf
powder

Metal Finish
Matt Gold

Il disco di luce è un simbolo antico, universale e fonte infinita di ispirazione. La sua geometria perfetta e leggera, unita alla foglia oro 24Kt, ne esalta la ricercata lavorazione artigianale.
Golden Disc è una lampada a sospensione costituita da un elemento luminoso in vetro di Murano con un triplo passaggio di foglia d'oro, modellato a mano in stampo sagomato.
Il vetro, che riflette la luce e la diffonde nell'ambiente, è incastonato in un disco di metallo finitura oro opaco satinato e sostenuto da un supporto metallico rivestito in pelle color sabbia. Ciascun elemento è fornito di un rosone in metallo finitura oro opaco e di un cavo elettrico di supporto della lunghezza massima di 2 m.

The disc of light is an ancient, universal symbol and never-ending source of inspiration. Its perfect, light geometry, combined with 24-carat gold leaf, enhances its sophisticated craftsmanship.
Golden Disc is a suspension lamp created with hand-moulded lighting element made of Murano glass, coated with three layers of gold leaf.
The glass, which reflects the light and radiates it around the room, is set in a matt gold-finish metal disc and sustained by a metal support upholstered in sand-coloured leather. Each element comes with a rose made of matt gold-finish metal and an electrical support cable with a maximum length of 2 metres.

TECHNICAL SHEET
GOLDEN DISC
Light source: LED
Total power: 4W
Voltage:220-240 V
Rated luminous flux: 315 Lm
Colour temperature: 3000° K
Colour rendering index: Ra>90
Dimmer function: No
Weight: Kg 10
Package size: 55 x 50 x 25 cm
Package weight: Kg 26
Package volume: Kg 0,10

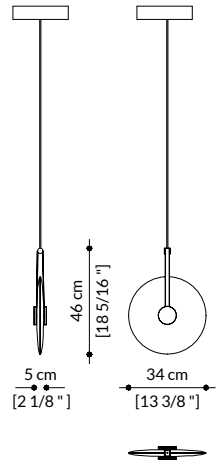

N. 1 ELEMENT | ILL.DISC.200 — 1.930,00€
Metal disc finished matt-gold
Muranese glass with 24KT golden leaf powder

◄ Elementi in vetro di Murano che racchiudono all'interno frammenti di foglia oro 24 KT in dispersione.

Murano glass elements contain sprinkled fragments of 24K golden leaf.

Golden Cloud
Wall

DESIGN | PAOLO CASTELLI

CE

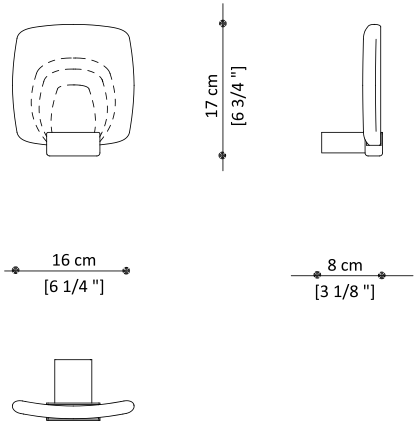

TECHNICAL SHEET
GOLDEN CLOUD WALL
Light source: LED
Total power: 3W
Voltage:220-240 V
Rated luminous flux: 5000 Lm
Colour temperature: 2700° K
Colour rendering index: Ra>80
Dimmer function: No
Weight: Kg 2
Package weight: Kg 8

Finishes of the above picture

Muranese glass with 24KTgolden leaf powder

Metal Finish
Matt Gold

Preziosa lampada a parete interamente realizzata a mano secondo le più antiche tradizioni muranesi. L'elemento, realizzato in vetro di murano con un triplo passaggio di foglia d'oro 24Kt, è agganciato a un corpo metallico in finitura oro opaco che alloggia al suo interno la sorgente led e il proprio driver.

Precious wall lamp entirely handmade according to the most ancient Murano traditions.
The element, made of Murano glass with a triple passage of 24Kt gold leaf, is hanged to a metal body in mat gold finish which hosts the LED source and its driver inside.

GOLDEN CLOUD WALL | ILL.GOLD.500 — 965,00€
Glass lampshade - Muranese glass with 24KTgolden leaf powder
Metal body in matt gold finish

Golden Disc
Wall

DESIGN | PAOLO CASTELLI

CE

Finishes of the above picture

Bovine Leather
Col. 634 Oasi

Muranese glass with
24KTgolden leaf
powder

Metal Finish
Matt Gold

Preziosa lampada a parete interamente realizzata a mano secondo le più antiche tradizioni muranesi. L'elemento, realizzato in vetro di Murano con un triplo passaggio di foglia d'oro 24Kt, è agganciato a un corpo metallico in finitura oro opaco che alloggia al suo interno la sorgente led e il proprio driver.

Precious wall lamp entirely handmade according to the most ancient Murano traditions.
The element, made of Murano glass with a triple passage of 24Kt gold leaf, is hanged to a metal body in mat gold finish which hosts the LED source and its driver inside.

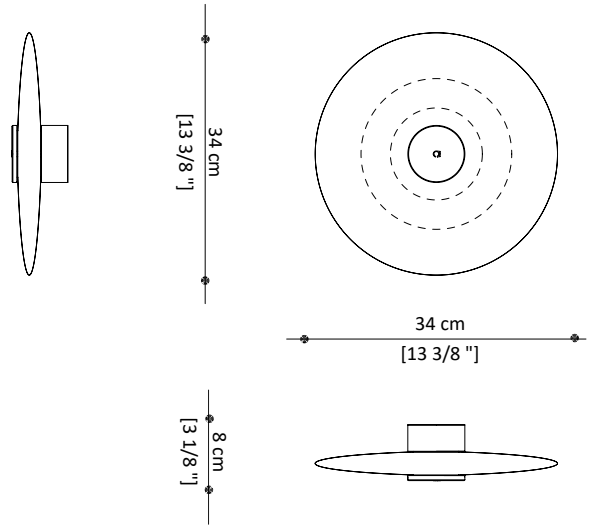

TECHNICAL SHEET
GOLDEN DISC WALL
Light source: LED
Total power: 4W
Voltage:220-240 V
Rated luminous flux: 315 Lm
Colour temperature: 3000° K
Colour rendering index: Ra>90
Dimmer function: No
Weight: Kg 10
Package size: 55 x 50 x 25 cm
Package weight: Kg 26
Package volume: Kg 0,10

GOLDEN DISC WALL | ILL.DISC.500 — 1.395,00€
Metal disc finished matt-gold
Muranese glass with 24KT golden leaf powder

Inspiration
Fine furniture and lighting

Labilis
Wall

DESIGN | PAOLO CASTELLI

CE

Finishes of the above picture

Metal Black
Matt
varnished

Metal Finish
Matt Bronzed
Brass

Tre anelli di diverso diametro installabili a parete singolarmente o in composizione libera. L'anello in metallo è finitura nero opaco con diffusore di luce led in policarbonato opalino bianco perimetrale. Ogni anello è fissato a parete da un cilindro metallico in finitura bronzo ottone opaco e da due distanziatori in metallo finitura nero opaco. Alimentatore remoto. Optionals su richiesta: anelli dimmerabili.

Three rings of different diameters that can be installed on the wall individually or in random composition. The metal ring has a matte black finish with a white opal polycarbonate LED light diffuser around the perimeter. Each ring is fixed to the wall by a metal cylinder in matt brass bronze finish and by two metal spacers in matt black finish. Remote power supply. Optionals on request: dimmable rings.

RING Ø27

TECHNICAL SHEET LABILIS Ø27
Light source: Strip Led 140 Led/m
Total power: 7,3W - Strip led 14,4W/m
Voltage: 230 V
Rated luminous flux strip led: 1092 Lm
Colour temperature: 2700°K
Colour rendering index: 90
Dimmer function: Yes
Weight: Kg 3

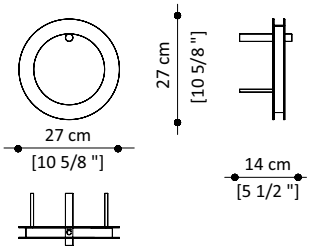

WALL RING Ø27 | ILL.LABI.530 — 1.350,00€
1 ring Ø27 in metal matt black varnished. Metal cylinder in matt bronzed brass
Remote drivers

RING Ø43

TECHNICAL SHEET LABILIS Ø43
Light source: Strip Led 140 Led/m
Total power: 9,7W - Strip led 14,4W/m
Voltage: 230 V
Rated luminous flux strip led: 1755 Lm
Colour temperature: 2700°K
Colour rendering index: 90
Dimmer function: Yes
Weight: Kg 4

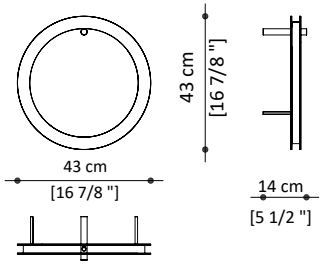

WALL RING Ø43 | ILL.LABI.520 — 1.620,00€
1 ring Ø43 in metal matt black varnished. Metal cylinder in matt bronzed brass
Remote drivers

RING Ø70

TECHNICAL SHEET LABILIS Ø70
Light source: Strip Led 140 Led/m
Total power:13,6W - Strip led 14,4W/m
Voltage: 230 V
Rated luminous flux strip led: 2857 Lm
Colour temperature: 2700°K
Colour rendering index: 90
Dimmer function: Yes
Weight: Kg 6

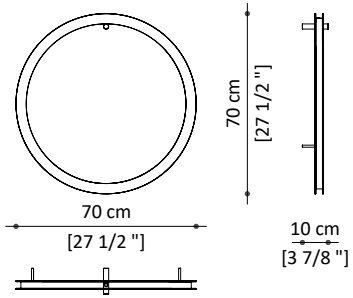

WALL RING Ø70 | ILL.LABI.510 — 2.270,00€
1 ring Ø70 in metal matt black varnished. Metal cylinder in matt bronzed brass
Remote drivers

Fair
Light

DESIGN | PAOLO CASTELLI

CE

Finishes of the above picture

Metal Finish
Matt Bronzed
Brass

Metal Painting
Black Matt

Fair Light è un corpo illuminante da parete costituito da un doppio binario di tubolari in metallo finitura nero opaco con diffusore in policarbonato opalino. La struttura di ancoraggio alla parete, che incorpora il driver, è in metallo finitura bronzo ottone opaco. L'apparecchio può essere montato sia in verticale che in orizzontale garantendo alla sorgente luminosa lineare un'ampia capacità di espressione, fornendo allo spazio energia e carattere.

Fair Light is a wall light fitting consisting of a double track made of black matt metal tubular elements with opal polycarbonate diffuser. The structure that anchors it to the wall incorporates the driver and is made of matt bronzed brass finished metal. The light can be fitted vertically or horizontally, guaranteeing the linear light source a broad capacity of expression, conveying energy and character to the room.

L60

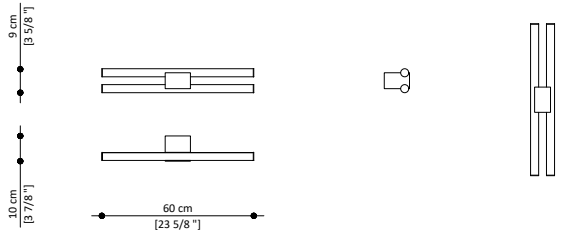

TECHNICAL SHEET
FAIR LIGHT 60
Light source: Strip LED
Total power: 14,4 W
Voltage: 24V
Rated luminous flux:1760 Lm
Colour temperature: 2700° K
Colour rendering index: Ra>80
Dimmer function: No
Weight: Kg 2

L60 | ILL.FAIR.510 — 1.360,00€
Metal elements black matt finished
Details in metal matt bronzed brass finish

L110

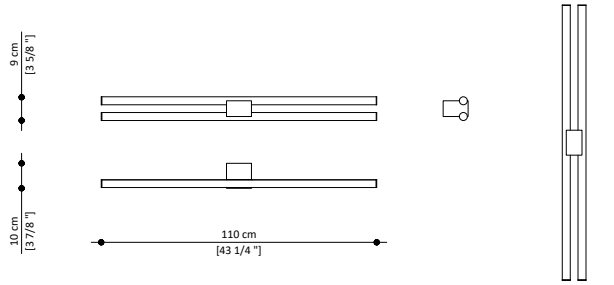

TECHNICAL SHEET
FAIR LIGHT 110
Light source: Strip LED
Total power: 28.8 W
Voltage: 24V
Rated luminous flux:1760 Lm
Colour temperature: 2700° K
Colour rendering index: Ra>80
Dimmer function: No
Weight: Kg 3

L110 | ILL.FAIR.520 — 1.815,00€
Metal elements black matt finished
Details in metal matt bronzed brass finish

Venus

Suspension

DESIGN | PAOLO CASTELLI

CE

Finishes of the above picture

Metal Finish
Matt Gold

Muranese glass with
24KTgolden leaf
powder

Venus diventa un elemento scenografico capace di rendere con la sua suggestiva lavorazione ogni ambiente ricco di una sofisticata luminosità. È composto da un ricco bouquet di elementi metallici a sezione semicircolare e stecche in vetro di murano in cristallo con inclusioni di scaglie oro 24 KT, posti ad altezze sfalsate e raccolti in una fascia metallica luminosa di forma circolare o ovale, trattata con particolare finitura oro opaco a più strati.

Venus is a cinematic element which makes every space rich with a sophisticated brilliance thanks to its suggestive manufacturing.
It consists of a rich bouquet of semicircular section metallic elements and Murano glass slats including gold 24 KT flakes, placed at staggered heights and collected in an oval or cirular metal band, treated with special finish mat gold.

ROUND

TECHNICAL SHEET
VENUS OVAL
Light source: Strip Led 9,6 W/M + 5 led spot x 3 W
Total power: 63W
Voltage:230V
Rated luminous flux: 1880 Lm
Colour temperature: 3000° K
Colour rendering index: Ra>80
Suspension cables length: 200 cm
Dimmer function: Yes - only for spots
Weight: Kg 70
Package size structure: 117 x 117 x 40 cm
Package weight structure: Kg 46
Package size glass: 117 x 67 x 80 cm
Package weight glass: Kg 116

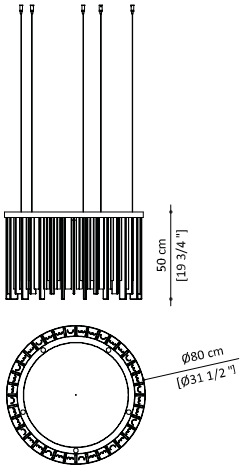

ROUND | ILL.VENU.220 — 17.010,00€
Mat gold finish
Muranese glass with 24KTgolden leaf powder

OVAL

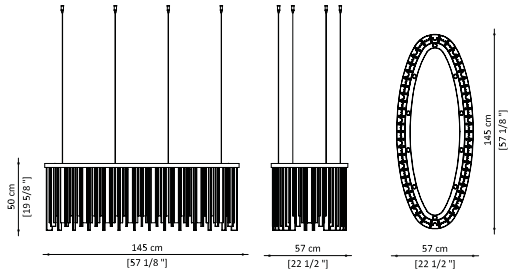

TECHNICAL SHEET
VENUS OVAL
Light source: Strip LED 9,6 W/M + 10 led spot x 3W
Total power: 78W
Voltage:230V
Rated luminous flux: 2330 Lm
Colour temperature: 3000° K
Colour rendering index: Ra>80
Suspension cables length: 200 cm
Dimmer function: Yes - only for spots
Weight: Kg 110
Package size: 176 x 86 x 54 cm
Package weight: Kg 130

OVAL | ILL.VENU.210 — 23.814,00€
Mat gold finish
Muranese glass with 24KTgolden leaf powder

Inspiration
Fine furniture and lighting

Wave
Suspension

DESIGN | PAOLO CASTELLI

CE

Finishes of the above picture

Metal Finish
Matt Gold

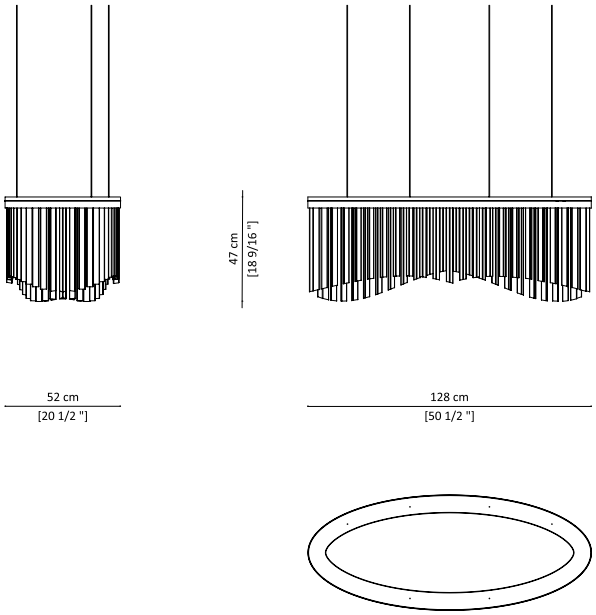

TECHNICAL SHEET
WAVE
Light source: LED
Total power: 117W
Voltage: 220-240 V
Rated luminous flux: 5000 Lm
Colour temperature: 3000° K
Colour rendering index: Ra>85
Dimmer function: No
Weight: Kg 52
Package size: 134 x 74 x 63 cm
Package weight: Kg 109
Package volume: Kg 0,63

Il lampadario WAVE è realizzato con una struttura in metallo di forma ovale, con una speciale finitura oro opaco, che accoglie gli elementi in vetro borosillicato a sezione triangolare di diverse altezze creando un effetto onda lungo tutto il perimetro.
All'interno del perimetro curviforme è posizionata una piastra illuminante con struttura in metallo e pannello in policarbonato opalino che diffonde la luce.

The WAVE chandelier is made of an oval-shaped metal structure, with a special finish mat gold, which houses the borosilicate glass elements in triangular section of different heights creating a wave effect along the entire perimeter.
Inside the curviform perimeter there is a lighting plate with a metal structure and an opal polycarbonate panel that diffuses the light.

WAVE SUSPENSION LAMP | ILL.WAVE.210 — 13.100,00 €
Metal structure mat gold
Borosilicate extraclear glass elements

Roulette
Suspension

DESIGN | PAOLO CASTELLI

CE

Finishes of the above picture

Metal Finish
Bronze
Shadow Mat

Fabric
Silk

Lampada a sospensione di forma cilindrica composta da una struttura in metallo finitura bronzo con paralume interno/esterno in tessuto color avorio, al suo interno è alloggiata una moderna sorgente led. Il paralume è impreziosito esternamente da una fascia esterna rivestita con prezioso tessuto in fibra naturale di colore bronzo scuro, intrecciata manualmente.

Cylindrical shaped suspension lamp composed of a metal structure with a bronze metal finish and an inner/outer shade in ivory-coloured fabric, within which a modern LED light source is housed. The lampshade is embellished externally by a band covered with a fine, hand-woven natural fibre fabric of a dark bronze colour.

Ø 60

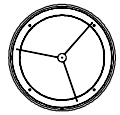

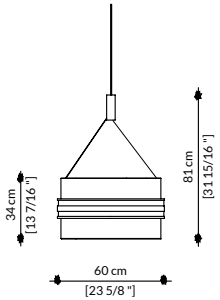

TECHNICAL SHEET
ROULETTE 60
Light source: LED 3 W x 22
Total power: 66W
Voltage:220- 240V
Rated luminous flux: 612 Lm
Colour temperature: 2700° K
Colour rendering index: Ra>80
Dimmer function: No
Weight: Kg 10
Package size: 70 x 70 x 50cm
Package weight: Kg 50
Package volume: Kg 0,25

Ø 60 | ILL.ROUL.220 — 4.310,00€
Structure in metal bronze shadow matt finish
Inner/outer shade in ivory-coloured fabric

Ø 90

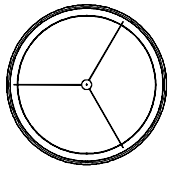

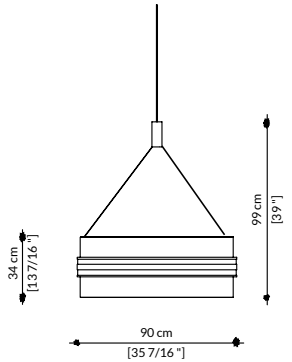

TECHNICAL SHEET
ROULETTE 90
Light source: LED 3 W x 22
Total power: 66W
Voltage:220- 240V
Rated luminous flux: 612 Lm
Colour temperature: 2700° K
Colour rendering index: Ra>80
Dimmer function: No
Weight: Kg 26
Package size: 101 x 101 x 54cm
Package weight: Kg 47
Package volume: Kg 0,55

Ø 90 | ILL.ROUL.210 — 5.560,00€
Structure in metal bronze shadow matt finish
Inner/outer shade in ivory-coloured fabric

Joy
Suspension

DESIGN | VITTORIO PARADISO

CE

Finishes of the above picture

Murano Glass
Amaranth

Matt
Brass

La composizione Joy nasce dal tema di dare corpo alla luce. La lampada è composta da tre anelli in ottone, ad altezza variabile, e sfere in vetro soffiato satinato bianco opaco (sfera grande) e rosso amaranto trasparente (sfera piccola) magicamente sospese all'interno della struttura metallica sottile. Un gioco di masse e di traiettorie circolari genera un disegno bilanciato di dinamiche gravitazionali.
La luce emanata dalle sfere si diffonde sullo spazio circostante e irraggia il telaio. I riflessi dell'ottone contribuiscono a rendere l'atmosfera ancora più sofisticata e onirica.

Disponibile la versione a un anello e a tre anelli.

Joy composition was born of the idea of giving form to light. The lamp is composed of three brass rings, with variable height, and spheres in hand-blown white satin glass (big sphere) and Amaranth see-through, (small sphere) magically suspended within a thin metal structure. The play of circular masses and trajectories generates a balanced design of gravitational dynamics.
The light from the sphere is diffused into the surrounding space, illuminating the frame. The reflections of the brass render the luminous field visible by its aura.

Available versions: one ring, three rings.

1 RING

TECHNICAL SHEET
JOY SUSPENSION 1 RING
Light source: LED
Total power:1.9 W
Voltage:220-240 V
Rated luminous flux:204 Lm
Colour temperature: 2700° K
Colour rendering index: Ra>80
Dimmer function: No
Weight: Kg 10
Package size: 76 x 76 x 49 cm
Package weight: Kg 26
Package volume: Kg 0,28

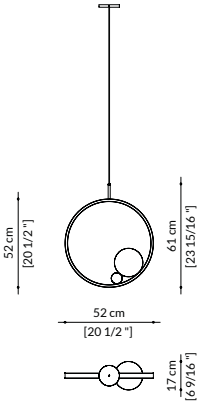

JOY 1 RING | ILL.JOYL.210 2.045,00€
1 ceiling canopy
Mat brass ring
Lamp shades in in hand-blown white satin glass
3 decorative glass spheres made in Murano glass col. Amaranth

3 RINGS

TECHNICAL SHEET
JOY SUSPENSION 3 RINGS
Light source: LED
Total power: 5.7 W
Voltage: 220-240 V
Rated luminous flux: 612 Lm
Colour temperature: 2700° K
Colour rendering index: Ra>80
Dimmer function: No
Weight: Kg 15
Package size 1: 68 x 68 x 31 cm
Package weight 1: Kg 5
Package volume: Kg 0,14
Package size 2: 45 x 47 x 35 cm
Package weight 2: Kg 13
Package volume: Kg 0,07

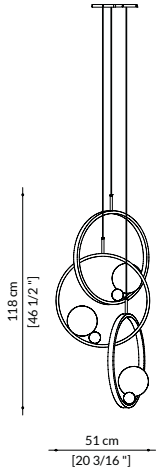

JOY 3 RINGS | ILL.JOYL.200 5.445,00€
3 ceiling canopies
Mat brass rings
Lamp shades in in hand-blown white satin glass
Decorative glass sphere made in Murano glass col. Amaranth

◄ Sfera decorativa in vetro soffiato a bocca da artigiani muranesi.

Decorative sphere made by glass-blowing Murano technique.

Joy
Wall

DESIGN | VITTORIO PARADISO

CE

Finishes of the above picture

Murano Glass
Amaranth

Matt
Brass

La composizione Joy nasce dal tema di dare corpo alla luce. La lampada è composta da un anello in ottone, e sfere in vetro soffiato satinato bianco opaco (sfera grande) e rosso amaranto (sfera piccola) magicamente sospese all'interno della struttura metallica sottile. Un gioco di masse e di traiettorie circolari genera un disegno bilanciato di dinamiche gravitazionali.
La luce emanata dalle sfere si diffonde sullo spazio circostante e irraggia il telaio. I riflessi dell'ottone contribuiscono a rendere l'atmosfera ancora più sofisticata e onirica.

Joy composition was born of the idea of giving form to light. The lamp is composed of a brass ring and spheres in hand-blown white satin glass (big sphere) and red see-through, (small spehere) magically suspended within a thin metal structure. The play of circular masses and trajectories generates a balanced design of gravitational dynamics.
The light from the sphere is diffused into the surrounding space, illuminating the frame. The reflections of the brass render the luminous field visible by its aura.

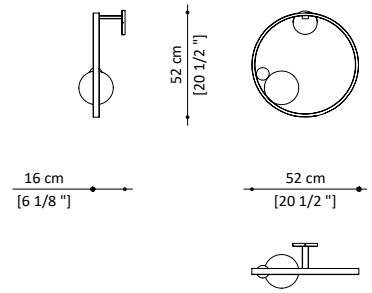

TECHNICAL SHEET
JOY WALL
Light source: LED
Total power:1.9 W
Voltage:220-240 V
Rated luminous flux:204 Lm
Colour temperature: 2700° K
Colour rendering index: Ra>80
Dimmer function: No
Weight: Kg 10
Package size: 72 x 75 x 45 cm
Package weight: Kg 30
Package volume: Kg 0,25

JOY WALL | ILL.JOYL.500 — 1.815,00€
Mat brass rings
Lamp shades in in hand-blown white satin glass.
Decorative glass sphere made in Murano glass col. Amaranth

Anodine
Wall

DESIGN | PAOLO CASTELLI

CE

Finishes of the above picture

Metal Finish
Matt Gold

Anodine Wall è una graziosa lampada a parete che trasforma la luce in un dipinto attraverso il richiamo al concetto di "forma non forma" stilizzata della luce, arricchendo con una nota artistica d'eccellenza l'ambiente. La composizione consta di 11 elementi, ognuno dei quali è a forma di foglia in metallo, realizzato asimmetricamente a mano da esperti artigiani con finitura oro satinato o nero opaco. Nel modulo fisso a 8 elementi, 3 sono dotati di Led da 2W ognuno. La composizione è completata da 3 elementi singoli, da disporre a piacere per creare infinite combinazioni. La preziosità della lavorazione artigianale rende ogni pezzo della collezione unico nel suo genere.

Anodine Wall is a delicate wall lamp that transforms light into a painting evoking the concept of "shape non-shape" of the light, which adds an artistic touch to the ambience. It comprises 11 shiny metal leaves, all asymmetrical and hand-made by expert artisans, with a matt finish gold or black. In the fixed eight-element module, three leaves are lighted by 2W LED each. The composition is completed by 3 single elements, to be installed by choice in order to create endless combinations. Thanks to hand-made manufacturing techniques, each piece of the collection is unique.

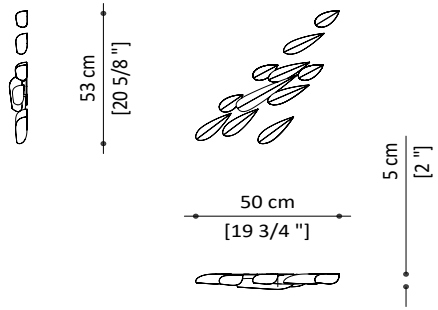

TECHNICAL SHEET
ANODINE WALL
Light source: Power LED COB
Total power: 11 W
Voltage: 220 - 240 V
Rated luminous flux: 1200 Lm
Colour temperature: 3000 °K
Colour rendering index: Ra80
Dimmer function: No
Weight: Kg 0,197
Package size: 72 x 52 x 68 cm
Package weight: Kg 13
Package volume: m^3 0,09

ANODINE WALL | ILL.ANOD.510
Mat gold

3.230,00€

◄ Foglie realizzate asimmetricamente a mano da esperti artigiani.

Handcrafted asymmetrical metal leaves.

Anodine
Floor

DESIGN | PAOLO CASTELLI

CE

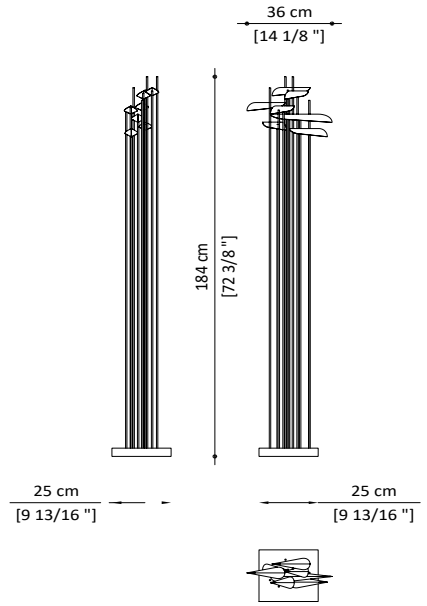

TECHNICAL SHEET
ANODINE FLOOR
Light source: Power LED COB
Total power: 24,5 W
Voltage: 54 V
Rated luminous flux: 2765 Lm
Colour temperature: 3000° K
Colour rendering index: Ra85
Dimmer function: No
Weight: Kg 10
Package size: 200 x 52 x 52 cm
Package weight: Kg 45

Finishes of the above picture

Metal Finish
Matt Gold

Metal Finish
Polished Brass

Anodine Floor è una lampada da terra che trasforma la luce in una scultura attraverso il richiamo al concetto di "forma non forma" stilizzata della luce, arricchendo con una nota artistica d'eccellenza l'ambiente. È composta da 13 lunghi steli in ottone lucido ancorati ad una base metallica quadrata, alcuni vengono decorati da foglie in metallo realizzate asimmetricamente a mano da esperti artigiani e decorate con fintura oro opaco satinato. La base è in finitura oro opaco satinato.Perfetta in coppia per creare la giusta simmetria nello spazio. La preziosità della lavorazione artigianale rende ogni pezzo della collezione unico nel suo genere.

Anodine Floor is a free-standing lamp that transforms light into a sculpture evoking the concept of "shape non-shape" of the light, which adds an artistic touch to the ambience. It comprises 13 shiny brass stems anchored to a square metal base finished "mat gold", some decorated with metal leaves, all asymmetrical and hand-made by expert artisans, with a matt gold satin finish. Perfect as a couple to create the right symmetry in the room. Thanks to hand-made manufacturing techniques, each piece of the collection is unique.

ANODINE FLOOR | ILL.ANOD.100 — 5.100,00 €
13 lighting elements
Lamp shades and base in mat gold finish - Polished brass stems

Anodine

Table & Mini

DESIGN | PAOLO CASTELLI

CE

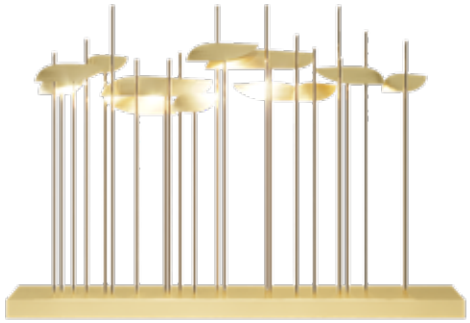

Finishes of the above picture

Metal Finish
Matt Gold

Metal Finish
Polished Brass

Anodine Table è una graziosa lampada da tavolo. La preziosità della lavorazione artigianale rende ogni pezzo della collezione unico nel suo genere.

ANODINE TABLE: È composta da 26 steli in ottone lucido ancorati ad una base metallica con finitura oro opaco satinato verniciata artigianalmente, che vengono decorati da foglie in metallo, realizzate asimmetricamente a mano da esperti artigiani e finite con finitura oro satinato.

ANODINE MINI: È composta da 3 steli in ottone lucido ancorati ad una base metallica con finitura oro opaco satinato, che vengono decorati da foglie in metallo realizzate asimmetricamente a mano da esperti artigiani con finitura oro opaco satinato verniciata artigianalmente.

Anodine table is a fair table lamp. Thanks to hand-made manufacturing techniques, each piece of the collection is unique.

ANODINE TABLE: It comprises 26 shiny brass stems anchored to a metal base with a matt gold satin artisanal painting finish, decorated with metal leaves, all asymmetrical and hand-made by expert artisans, with a matt gold finish.

ANODINE MINI: It comprises 3 shiny brass stems anchored to a metal base with a matt gold satin finish, decorated with metal leaves, all asymmetrical and hand-made by expert artisans, with a matt gold artisanal painting finish.

MINI

TECHNICAL SHEET
ANODINE MINI
Light source: Power LED COB
Total power: 10,5 W
Voltage: 120 V
Rated luminous flux:1185 Lm
Colour temperature: 3000° K
Colour rendering index: Ra85
Dimmer function: No
Weight: Kg 3
Package size: 37 x 37 x 83 cm
Package weight: Kg 18

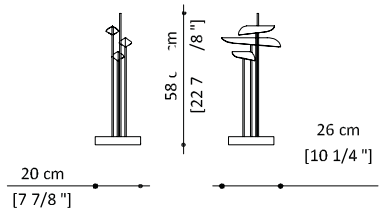

ANODINE MINI | ILL.ANOD.430 — 2.150,00 €
3 lighting elements
Lamp shades and base in mat gold finish - Polished brass stems

TABLE

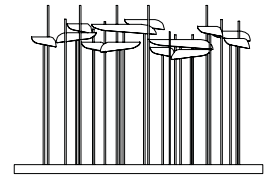

TECHNICAL SHEET
ANODINE TABLE
Light source: Power LED COB
Total power:13 x 3,15 W (41 W)
Voltage: 110 -295 V
Rated luminous flux:5135 Lm
Colour temperature: 3000° K
Colour rendering index: Ra85
Dimmer function: No
Weight: Kg 10
Package size: 117 x 37 x 97 cm
Package weight: Kg 56

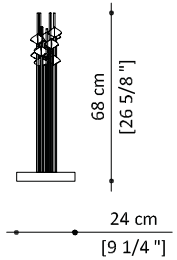

ANODINE TABLE | ILL.ANOD.410 — 6.010,00 €
13 lighting elements
Lamp shades and base in mat gold finish - Polished brass stems

Comet

Floor & table

DESIGN | PAOLO CASTELLI

archiproducts DESIGN SELECTION 2021

Finishes of the above picture

Fabric Natural col. Ivory

Matt Brass

Oiled Canaletto walnut

Wood with acidetched zinc finish

Lampade totemiche realizzate con basamento in noce Canaletto oliato o in legno metallizzato con finitura zinco acidato, impreziosito da un inserto in ottone satinato opaco. Paralume a forma di anello realizzato in tessuto naturale col. avorio.

Totemic lamps made with base in oiled Canaletto walnut or in metallized wood with acidetched zinc finish, embellished with an insert in matt satin brass. Ring-shaped lampshade made of natural fabric col. ivory.

FLOOR

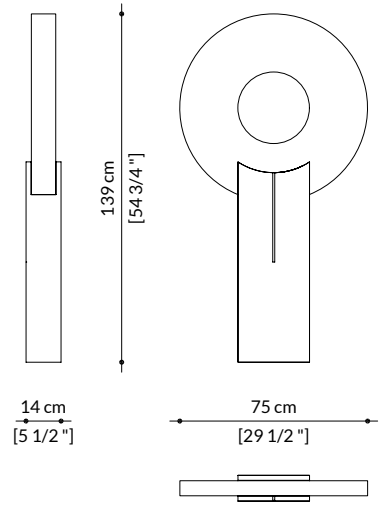

FLOOR LAMP | ILL.COME.100 — 2.990,00€
Base made in oiled Canaletto walnut.
Lampshade in natural fabric col. Ivory.

FLOOR LAMP | ILL.COME.101 — 4.400,00€
Base made in metallized wood with acidetched zinc finish.
Lampshade in natural fabric col. Ivory.

TABLE

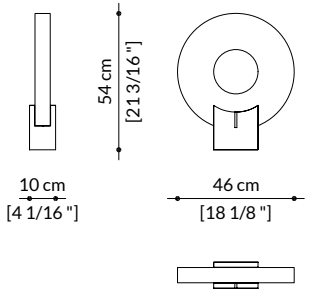

TABLE LAMP | ILL.COME.400 — 1.900,00€
Base made in oiled Canaletto walnut.
Lampshade in natural fabric col. Ivory.

TABLE LAMP | ILL.COME.401 — 2.200,00€
Base made in metallized wood with acidetched zinc finish.
Lampshade in natural fabric col. Ivory.

Inspiration
Fine furniture and lighting

Soreluna
Lamp

DESIGN | PAOLO CASTELLI

CE

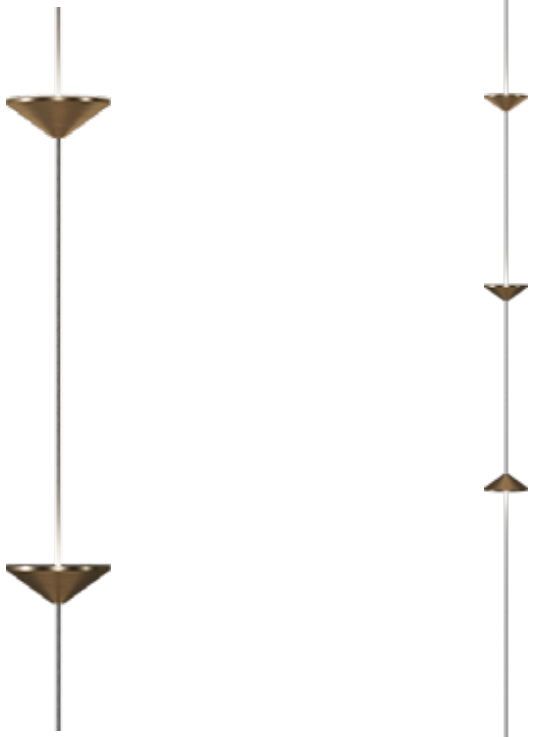

Finishes of the above picture

Metal Finish
Matt Gold

Metal Painting
Black Matt

Lampada ancorata a soffitto composta da un cavo tirante centrale e contrappeso a terra realizzato in metallo verniciato nero opaco. Il cavo tirante centrale monta tre lampade coniche realizzate in metallo, con finitura oro opaco ed emissione luminosa con piastrine led circolari. Il rosone a soffitto è sempre di forma conica, in metallo finitura oro opaco.

Lamp anchored to the ceiling consisting of a central tie-rod cable and ground counterweight made of metal - matt varnished black. The central pull cable mounts three conical lamps made of metal, with a matt gold finish and light emission with circular LED plates. The ceiling rose is always conical in shape, in metal with a matt gold finish.

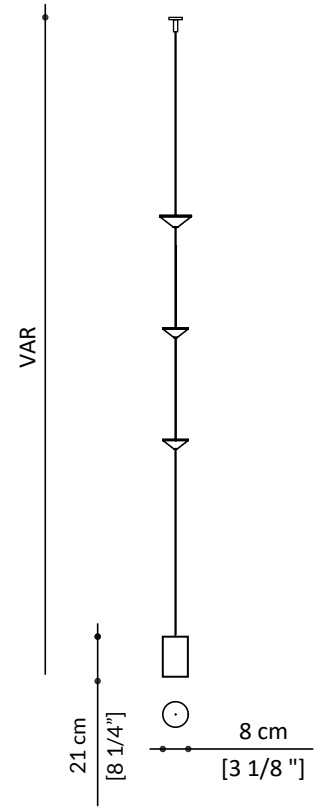

SORELUNA | ILL.SORE.100
3 Mat gold finish caps - metal cable
Metal basement matt varnished black

2.052,00€

Circle
Lamp

DESIGN | PAOLO CASTELLI

CE

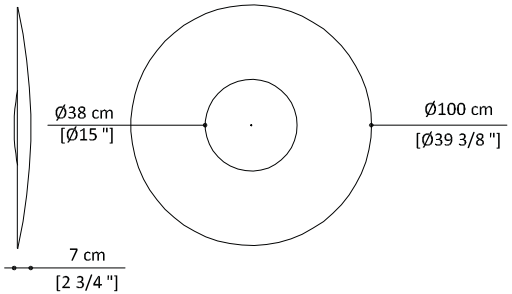

TECHNICAL SHEET
CIRCLE LAMP
Light source: Strip LED 8 W/M
Total power: 7,2W
Voltage: 230V
Rated luminous flux: 585 Lm
Colour temperature: 2700° K
Colour rendering index: Ra85
Dimmer function: No
Weight: Kg 15
Package size: 118 x 118 x 38 cm
Package weight: Kg 50

Finishes of the above picture

Metal Finish
Polished Gold

Metal Finish
Varnished
Bronze

Metal Finish
Varnished
Ivory

Una lampada decorativa da parete dalle dimensioni importanti ispirata alle linee morbide degli anni '40. Circle Lamp è realizzata attraverso un grande disco leggermente concavo in metallo martellato a mano e smaltato a specchio in diversi colori sul quale poggia al centro, come una goccia, una mezza sfera in metallo specchiato finitura oro lucido. Ogni pezzo della collezione è unico grazie alla preziosa lavorazione a mano.

A remarkable size decorative wall lamp, inspired by the soft lines of the 1940s. Circle Lamp consists of a slightly concave disc made of hand-hammered metal shiny gold and mirror glazed in various colors, on which a half sphere in reflective material sits like a drop. Thanks to hand-made manufacturing techniques, each piece of the collection is unique.

CIRCLE LAMP | ILL.CIRC.500 — 2.300,00 €
Mat varnished disc with polished gold diffuser

◄ Grande disco leggermente concavo in metallo battuto a mano.

Large disc slightly concave made of metal hammered by hand.

Anodine
Circle Light

DESIGN | PAOLO CASTELLI

CE

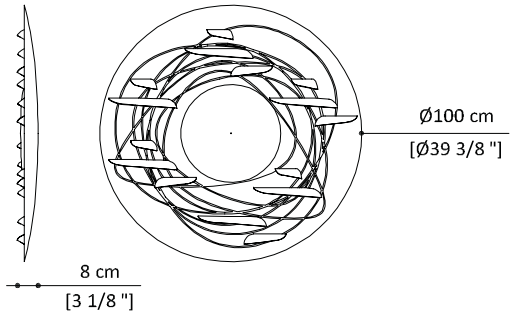

TECHNICAL SHEET
ANODINE CIRCLE LIGHT
Light source: Strip LED 8 W/M + LED COB 36 W
Total power: 43,2W
Voltage: 115 - 230 V
Rated luminous flux: 4785 Lm
Colour temperature: 2700° K
Colour rendering index: Ra80/85
Dimmer function: No
Weight: Kg 17
Package size: 118 x 118 x 38 cm
Package weight: Kg 52

Finishes of the above picture

Metal Finish
Matt Gold

Metal Finish
Varnished
Grey

Metal Finish
Polished Gold

Anodine Circle Light di giorno è una scultura che riflette le dinamiche della luce naturale. Una lampada dal forte rimando artistico che bene si adatta agli ambienti dalla ricercata personalità. Si compone di tanti elementi luminosi in metallo con elegante finitura oro opaco satinato verniciata artigianalmente, legati tra di loro da un filo d'acciaio che fluttuano attorno alla lente centrale realizzata in metallo specchiato finitura oro lucido.

During the day, Anodine Circle Light is a sculpture that reflects the dynamics of natural light. A lamp with a strong artistic personality that suits spaces with a defined character. It comprises metal elements with an elegant artisanal painting matt gold finish, bound together with a steel wire, that fluctuate around the central structure made of mirror polished metal with a polished gold finish.

ANODINE CIRCLE LIGHT | ILL.ANOD.500 — 6.125,00 €
Grey mat varnished plate with inner polisded bronzed element
Details in mat gold finish

◄ Foglie realizzate asimmetricamente a mano da esperti artigiani.

Handcrafted asymmetrical metal leaves.

Galaxy
Wall Lamp

DESIGN | PAOLO CASTELLI

CE

Finishes of the above picture

Metal Finish
Matt Bronzed Brass

Metal Finish
Polished Gold

Galaxy è una lampada da parete che con le sue forme e riflessi diventa una vera e propria scultura. E' composta da lenti convesse in finitura oro lucido, abbinate a dischi in metallo finitura bronzo ottone opaco. Le superfici lisce e convesse donano dinamicità allo spazio.

Galaxy is a wall lamp with shapes and reflexes that almost turns it into a sculpture. It comprises a number of convex metal elements, with gold, shiny finish that reflect different tones of light combined with metal discs matt bronzed brass. Smooth and convex surfaces bring dynamism to the space.

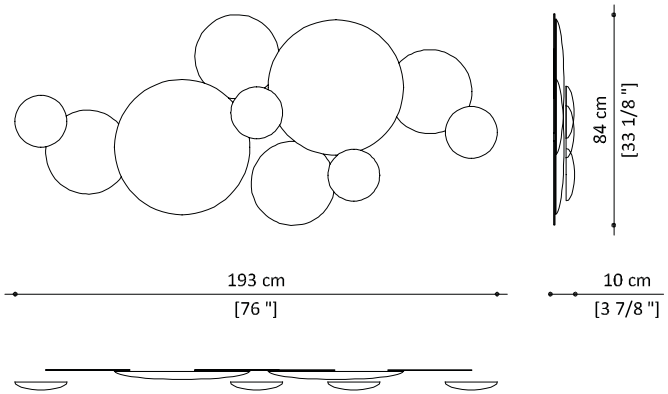

TECHNICAL SHEET
GALAXY
Light source: n. 2 LED modules 22W - n. 4 LED modules 11W
Total power: 88W
Voltage: 230V
Rated luminous flux: 4880 Lm
Colour temperature: 2700° K
Colour rendering index: Ra85
Dimmer function: No
Weight: Kg 22
Package size: 108 x 67 x 61 cm
Package weight: Kg 67

GALAXY | ILL.GALA.500 — 7.370,00 €
Matt polished gold lens
Matt bronzed brass discs

◄ Galvanica: prezioso processo di trattamento dell'ottone in grado di conferire allo stesso un'inaspettata tridimensionalità.

Galvanic process: galvanic bath which gives to brass precious three-dimensional effect.

Colette & Hugo

Table Lamp

DESIGN | PAOLO CASTELLI

CE

Finishes of the above picture

Fabric
Percale

Muranese glass with
24KTgolden leaf
powder

Dalla maestria degli artigiani vetrai di Murano nasce questa amabile coppia di lampade da tavolo. Ne viene proposto un ensemble per enfatizzare la perfetta armonia di forma e stile, amabili tuttavia anche singolarmente per conferire un tocco sofisticato a qualsiasi tipo di ambientazione.
La base è a forma di goccia, realizzata in vetro di Murano con all'interno povere d'oro 24 KT in sospensione, e paralume in tessuto percalle realizzato artigianalmente, Hugo, più compatta, ha una forma piena e morbida ed un cappello cilindrico, mentre Colette è slanciata e leggermente più alta, con un paralume rastremato.

Thanks to the Murano glass hand craftsmanship virtuosity, a lovely couple of table lamp has appeared. This ensemble emphasizes the perfect shape and style harmony that can be appreciated also in their singularity in order to give a sophisticated touch to every kind of set. The drop-shape base is made of Muranese glass enclosing a 24 KT golden leaf, the lampshade is in a hand made fabric percale.
Hugo, more compact, has a full and soft shape and a cylindrical lampshade; otherwise, Colette is slim and a bit higher with a tapered lampshade.

COLETTE

TECHNICAL SHEET
COLETTE
Light source: E27 light bulb
Lamp socket: E27
Total power: 8 W
Voltage: 230 V
Rated luminous flux: 1055 lm
Colour temperature: 2700°K
Colour rendering index: Ra>80
Dimmer function: No
Weight: Kg 8
Package size: 55 x 55 x 45 cm (lampshade)
Package size: 40 x 40 x 60 cm (base)
Package weight: Kg 3 (lampshade)
Package weight: Kg 10 (base)

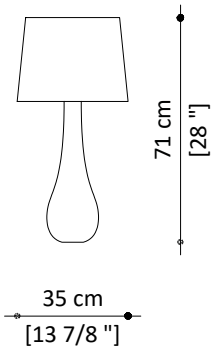

COLETTE | ILL.ALLU.410 2.155,00€
Muranese glass with 24KTgolden leaf powder- Percale fabric lampshade

HUGO

TECHNICAL SHEET
HUGO
Light source: E27 light bulb
Lamp socket: E27
Total power: 8 W
Voltage: 230 V
Rated luminous flux: 1055 lm
Colour temperature: 2700° K
Colour rendering index: Ra>80
Dimmer function: No
Weight: Kg 8
Package size: 55 x 55 x 45 cm (lampshade)
Package size: 50 x 50 x 50 cm (base)
Package weight: Kg 3 (lampshade)
Package weight: Kg 10 (base)

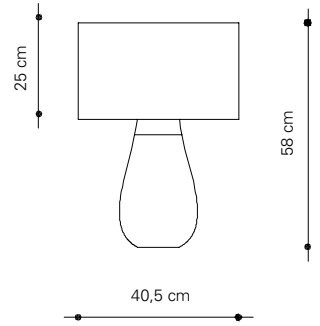

HUGO | ILL.ALLU.420 2.155,00€
Muranese glass with 24KTgolden leaf powder- Percale fabric lampshade

◄ Logo decorativo inciso manualmente da abili artigiani.

Decorative logo engraved by hand by expert artisans.

Ambra

Table Lamp

DESIGN | ILARIA BALDUINO SARTORI

CE

Finishes of the above picture

Metal Finish
Matt Bronzed
Brass

Fabric
Blended
viscose

Plexyglass
lucite

Ambra è l' abat-jour ideale per creare dei caldi ed eleganti punti luce in salotti, camere padronali e raffinate suite. Questa lampada è composta da un'asta in ottone con finitura bronzo ottone opaco nella quale sono inseriti e ruotano dischi in lucite alternati a metallo che creano un sofisticato gioco di trasparenze e riflessi di luci. Ambra è completata nella parte superiore da un prezioso cappello in tessuto misto viscosa col. crema, impreziosito ai bordi da un'elegante passamaneria in tinta.

Ambra is the ideal table lamp to crate warm and elegant lighting points in lounges, master bedrooms and elegant suits. It comprises a brass rod with a matt bronzed brass finish on which lucite rotating discs alternate with metal, creating a sophisticated transparency and light reflection.
Ambra is finished with an exquisite lampshade in viscose blended fabric col. cream, enriched at the edges with precious coordinated braid.

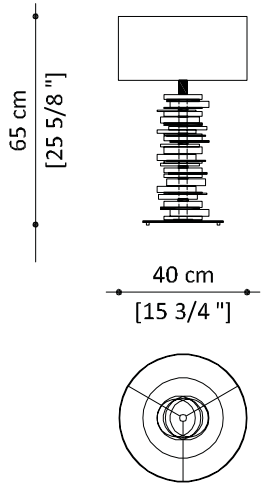

TECHNICAL SHEET
AMBRA
Light source: E27 light bulb
Lamp socket: 1 x E27
Total power: 9 W
Voltage: 230 V
Rated luminous flux: 1055 lm
Colour temperature: 2700° K
Colour rendering index: Ra>80
Dimmer function: No
Weight: Kg 16
Package size: 52 x 52 x 41 cm (lampshade)
Package size: 60 x 41 x 40 cm (base)
Package weight: Kg 5 (lampshade)
Package weight: Kg 20 (base)

AMBRA TABLE LAMP | ILL.AMBR.410 — 3.630,00€
Metal and plexyglass with blended viscose fabric lampshade

Lucite: materiale molto diffuso nella realizzazione di gioielli e bijoux negli anni ’30 e ’40.

Lucite: widespread material used for jewellery and bijoux in the ‘30s and ‘40s.

Nettuno

Table Lamp

DESIGN | VITTORIO PARADISO

CE

Finishes of the above picture

Metal Finish
Matt Gold

Murano
Glass Pink

Fabric
Percale

Coppia di lampade da tavolo che completa la collezione Nettuno (tavolo, desk e coffee table).
Il corpo in vetro scanalato a mano ha forma di parallelepipedo e viene presentato di colore e altezze diverse. Il corpo più slanciato è di colore rosa antico, mentre quello più compatto è di color pagliesco, entrambi reggono un portalampada con due lampadine E27. Il paralume in tessuto percale color avorio, l'accensione a catenella e il cavo di alimentazione in tessuto color oro contribuiscono a creare una silhouette calda e sofisticata. Entrambi i modelli possono essere realizzati in color rosa antico o pagliesco. È disponibile in due dimensioni.

Pair of table lamps that complete the Nettuno collection (table, desk and coffee table).
The body in hand-grooved glass in the shape of a parallelepiped is presented in different colours and heights. The more slender body is in antique pink, while the more compact body is straw-coloured; both are fitted with a lamp holder for two E27 bulbs. The ivory-coloured percale fabric lampshade, the chain-style pull-cord and the gold-coloured fabric power supply cable contribute to creating a warm and sophisticated silhouette. Boths lamps can be made in antique pink or straw-coloured glass.
It is available in two sizes.

SMALL

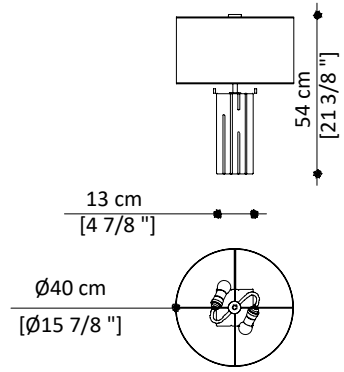

TECHNICAL SHEET
NETTUNO TABLE LAMP SMALL
Light source: E27 LED 2X
Total power: 5.5 W x 2
Voltage: 220 - 240 V
Rated luminous flux:470 Lm
Colour temperature: 2700° K
Colour rendering index: Ra>80
Dimmer function: No
Weight: Kg 6
Package size base: 80 x 28 x 32 cm
Package weight base: Kg 7
Package volume: Kg 0,07
Package size lampshade: 49 x 47 x45 cm
Package weight lampshade: Kg 2
Package volume: Kg 0,07

SMALL | ILL.NETT.420 — 2.106,00€
Structure in hand-grooved glass straw-coloured
Percale fabric lampshade

BIG

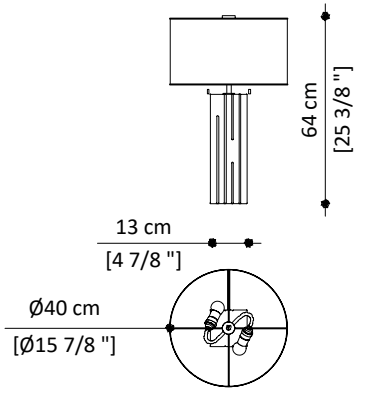

TECHNICAL SHEET
NETTUNO TABLE LAMP BIG
Light source: E27 LED 2X
Total power: 5.5 W x 2
Voltage: 220 - 240 V
Rated luminous flux:470 Lm
Colour temperature: 2700° K
Colour rendering index: Ra>80
Dimmer function: No
Weight: Kg 6
Package size base: 80 x 28 x 32 cm
Package weight base: Kg 7
Package volume: Kg 0,07
Package size lampshade: 49 x 47 x45 cm
Package weight lampshade: Kg 2
Package volume: Kg 0,07

BIG | ILL.NETT.410 — 2.268,00€
Structure in hand-grooved glass antique pink
Percale fabric lampshade

◄ Corpo parallelepipedo in vetro di Murano lavorato e scanalato a mano.

A glass parallelepiped fluted by hand by Muranese artisans.

STANDARD SALES TERMS AND CONDITIONS

General Provisions
a) The Standard Sales Terms and Conditions (hereinafter referred to as the "Standard Terms and Conditions") form an integral part of the agreements entered into between Paolo Castelli S.p.a.(herei- nafter referred to as "Paolo Castelli") and the Purchaser for the supply of products supplied and/or distributed by the above mentioned company (hereinafter the "Products").
(b) The Standard Terms and Conditions apply to all transactions entered into between Paolo Castelli and the Purchaser whether or not expressly referenced therein.Any terms or conditions different from those provided herein shall only take effect if confirmed in writing by Paolo Castelli. Paolo Castelli reserves the right to modify, supplement or amend the Standard Terms and Conditions, by attaching such changes to quotations or any written correspondence.

Quotations and orders
Customer's acceptance of the quotations submitted by Paolo Castelli- upon receipt of 50% deposit- is binding on the Customer and irrevocable. Upon receipt of such acceptance, Paolo Castelli will send the Customer an order confirmation expressly stating delivery method and the technical information necessary to deliver the goods (e.g. delivery addresses, delivery to the floor, time, contact persons and telephone number). Any quotations submitted by agents shall only be deemed to be valid and effective after they are confirmed in writing by Paolo Castelli. Any changes to or requests and integrations to quotations by agents or Customers shall be made in writing, and shall require a written confirmation by Paolo Castelli. Paolo Castelli disclaims any and all liabilities for possible errors or misunderstandings arising in connection with changes to orders placed verbally or over the telephone.

Prices and Payment Terms
Product Prices do not include VAT, which must be paid according to specific indications provided in the invoice.
Taxes, duties, shipping, insurance, installation and after-sales service are not included in the prices, unless quoted separately.
In addition to the other remedies allowed by applicable law or these General Terms and Conditions, Paolo Castelli reserves the right to charge late payment interests at the official interest rate set by the European Central Bank plus seven (7) points as of the day payment was due. Payments shall be made as follows: 50% down payment when quotation is signed; 50% balance shall be paid before Products are shipped.Any other conditions agreed upon shall require the written form. In the event of default or late payment after the term indicated by Paolo Castelli, even in part or limited to one price instalment, Paolo Castelli shall be entitled to terminate the agreement without further notice. All amounts paid up to that time shall be withheld by way of damage compensation.

Changes to orders
Any requests of changes deviating from the content of order confirmation may only be accepted if compatible with the production process and/or the process under way.If accepted, they may give rise to extra charges incurred in making such changes.
Orders – Customer's default
It is hereby expressly agreed that the Customer may not unilaterally terminate the order and/or the agreement.In the event after confirming an order Paolo Castelli becomes aware of detrimental events affecting the Purchaser such as protests, seizures, attachment, or it becomes known that the Purchaser is in financial difficulties, Paolo Castelli may, at its discretion, suspend order fulfilment and demand special guarantees, or terminate the agreement on grounds of Purchaser default under art. 1456 of the Italian Civil Code by written notice via registered mail with advice of receipt, fax or CEM.

Combinations of fabrics
If the requested covering is to be made with coordinated fabrics of different categories, the price applied will be that of the higher category.

Delivery and Delivery Terms
Unless otherwise agreed, delivery is ex works at Customer's risk.Notwithstanding the above, Paolo Castelli may charge an additional shipping fee to Customer on invoice.Partial deliveries are only allowed when agreed upon between the parties and any extra costs shall be borne by Customer.The delivery times indicated by Paolo Castelli are not binding and are computed in working days starting from receipt of the first down payment. In the event delivery is postponed through fault of the Customer and the Product needs to be kept in stock for more than 5 days after the agreed delivery date, any relating costs shall be charged to Customer and Paolo Castelli shall not be liable for any damage to and/or deterioration of the Product. Unless otherwise agreed, downloading and delivery to floor are at the Customer's expense. For any events outside the control of Paolo Castelli, such as orders of authorities, shortage of raw materials, riots of any kind and other force majeure events, Paolo Castelli shall deem itself to not be bound to any terms or commitments for the duration of the adverse event.

Installation
At Customer's request, installation may be performed by personnel appointed by Paolo Castelli, and any costs incurred for installers and the assistance of skilled personnel shall be at Customer's char- ge.Installation does not include any masonry work, plant installation, or any other work not expressly specified on order or anyway outside the scope of the supply.
Customer shall make available a suitable storage room for products and equipment. Paolo Castelli shall not be liable for faults or breakdown occurring during installation.

Responsability:
Paolo Castelli does not respond to any damage to person or property caused by the incorrect installation of its lighting fixtures and furniture.

Warranty
It is the Customer's responsibility to check product compliance at the time of receipt and anyway before commissioning. Unless Customer claims a defect and informs the seller within eight days from discovering such defect, Customer's rights under applicable law shall become null and void. Failure to comply with payment terms and conditions on the part of the Purchaser shall make the warranty null and void.

Retention of title
Pursuant to articles 1523 and 1524 of the Italian Civil Code, the parties agree that the sales transaction is subject to retention of title in favour of the seller.The parties agree that the ownership of the Product is transferred to the Customer at the time the full price is settled, whereas possession and the associated risk to the Purchaser is transferred at the time the product is shipped to Customer. Court of jurisdiction
The agreement is governed by Italian law. Any dispute concerning the construction or performance of agreements between the parties shall be submitted to the Court of Bologna, that shall have sole jurisdiction.

PUBLIC PRICES VAT NOT INCLUDED

I prodotti Paolo Castelli privilegiano materiali biologici e sono frutto di una particolare ricerca nel campo dell'ecosostenibilità.

A giugno 2019 Paolo Castelli S.p.A. ha ottenuto la certificazione FSC® Forest Stewardship council®. La scelta di certificarsi è stata un impulso dato dal mercato, certo, ma anche la naturale prosecuzione di un percorso già avviato dall'Azienda, che concepisce la filiera del legno come un circolo virtuoso. L'azienda definisce così il proprio percorso: l'idea di confermarsi autrice di prodotti di assoluta qualità si unisce ad un impegno, rigoroso e responsabile, nei confronti dell'ambiente, che i legni utilizzati provengono da tagli legali e filiere certificate, per dimostrare il proprio impegno per il raggiungimento dell'obiettivo globale di guidare il mercato verso una gestione responsabile del patrimonio forestale.

For our products we prefer organic materials and they are the result of particular research in the environmental sustainability field.

In June 2019 Paolo Castelli S.p.A. has obtained the FSC® Forest Stewardship council® certification. The decision to certify itself was an impulse given by the market, certainly, but also the natural continuation of a path already started by the Company, which conceives the wood supply chain as a virtuous circle. The company thus defines its own route: the idea of confirming itself as the author of products of absolute quality is combined with a commitment, rigorous and responsible, towards the environment, guaranteeing that the woods used come from legal cuts and certified supply chains , to demonstrate its commitment to achieving the global objective of guiding the market towards a responsible management of forest heritage.

FSC
www.fsc.org

CERTIFICATIONS: ISO 9001, ISO 14001, FSC

PAOLO CASTELLI

La descrizione e le immagini dei prodotti del presente catalogo sono puramente indicative e non possono essere considerate vincolanti ai fini del loro utilizzo. Paolo Castelli S.p.A. si riserva di apportare ai prodotti le modifiche che ritiene più opportune, in qualsiasi momento e senza preavviso. I prodotti, di natura artigianale, possono presentare artefatti materici o irregolarità di lavorazione. Tali irregolarità sono da considerarsi parte integrante della struttura del prodotto stesso e garanzia della lavorazione interamente artigianale. Per ulteriori informazioni sulle caratteristiche tecniche dei prodotti, invitiamo a consultare il sito www.paolocastelli.com dove troverete l'elenco dei contatti a cui rivolgervi.

Descriptions and pictures of the products included in the present catalogue are purely indicative and cannot be considered binding for their final use. Paolo Castelli S.p.A. reserves itself the right to modify its own products without any prior notification. The handmade artisan production can present irregularities due to the manufacturing. These irregularities must be considered essential part of the product itself and guarantee of entirely handcrafted manufacturing. For any further technical information on the products, please visit www.paolocastelli.com where you can find all the contacts you can address to.

DOCUMENT DATED: MARCH 2022

PAOLO CASTELLI

BOLOGNA
Headquarter

MILAN
Showroom

PARIS
Showroom

LONDON
Office

CARRARA
Marine Division

HEADQUARTER VIA I° MAGGIO, 93 | 40064 OZZANO DELL'EMILIA | BOLOGNA - ITALY | TEL. +39 051 4695511 | info@paolocastellispa.com | www.paolocastelli.com